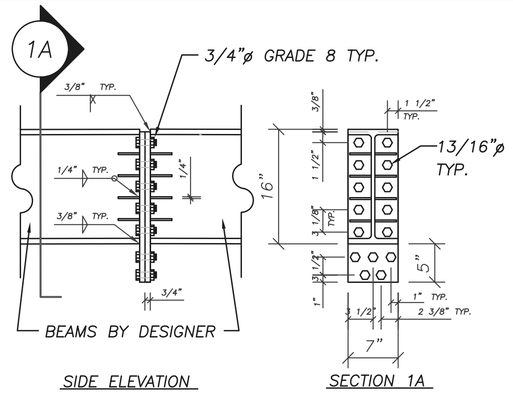

CONNECTION DETAILS 1

SCALE: 1" = 1'-0"

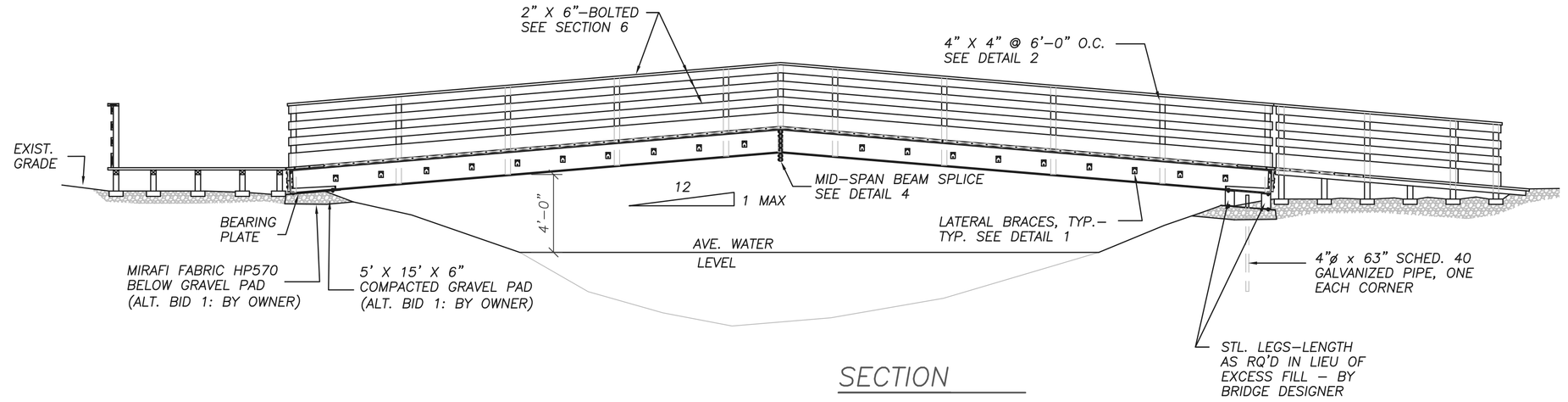

SECTION

SCALE: 1/4" = 1'-0"

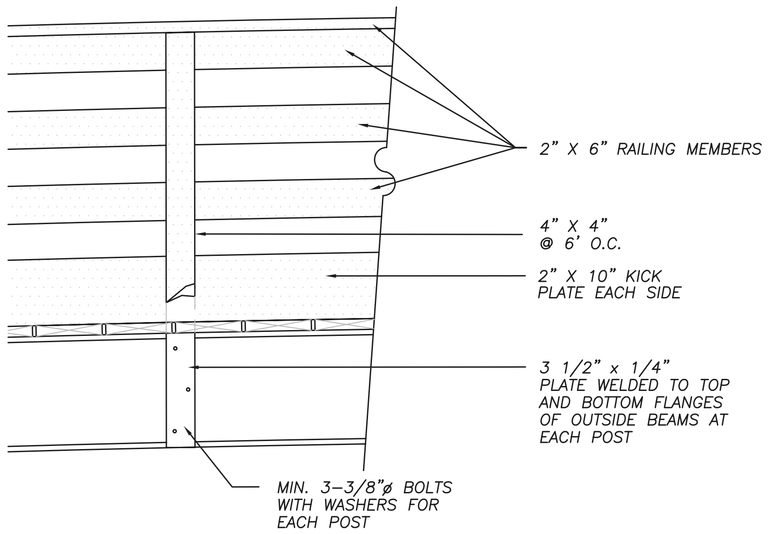

RAILING POST CONNECTION DETAIL 2

SCALE: 1" = 1'-0"

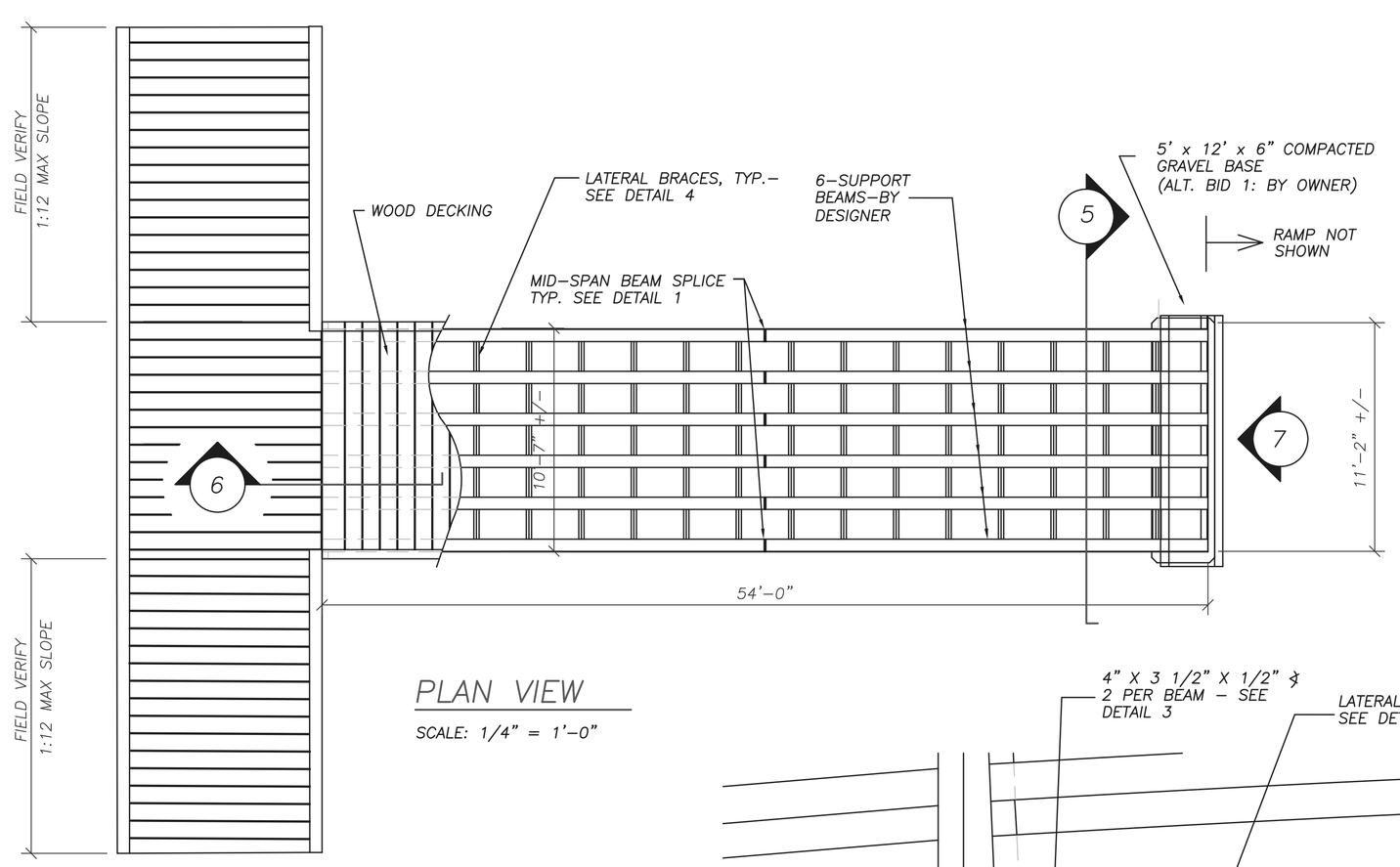

PLAN VIEW

SCALE: 1/4" = 1'-0"

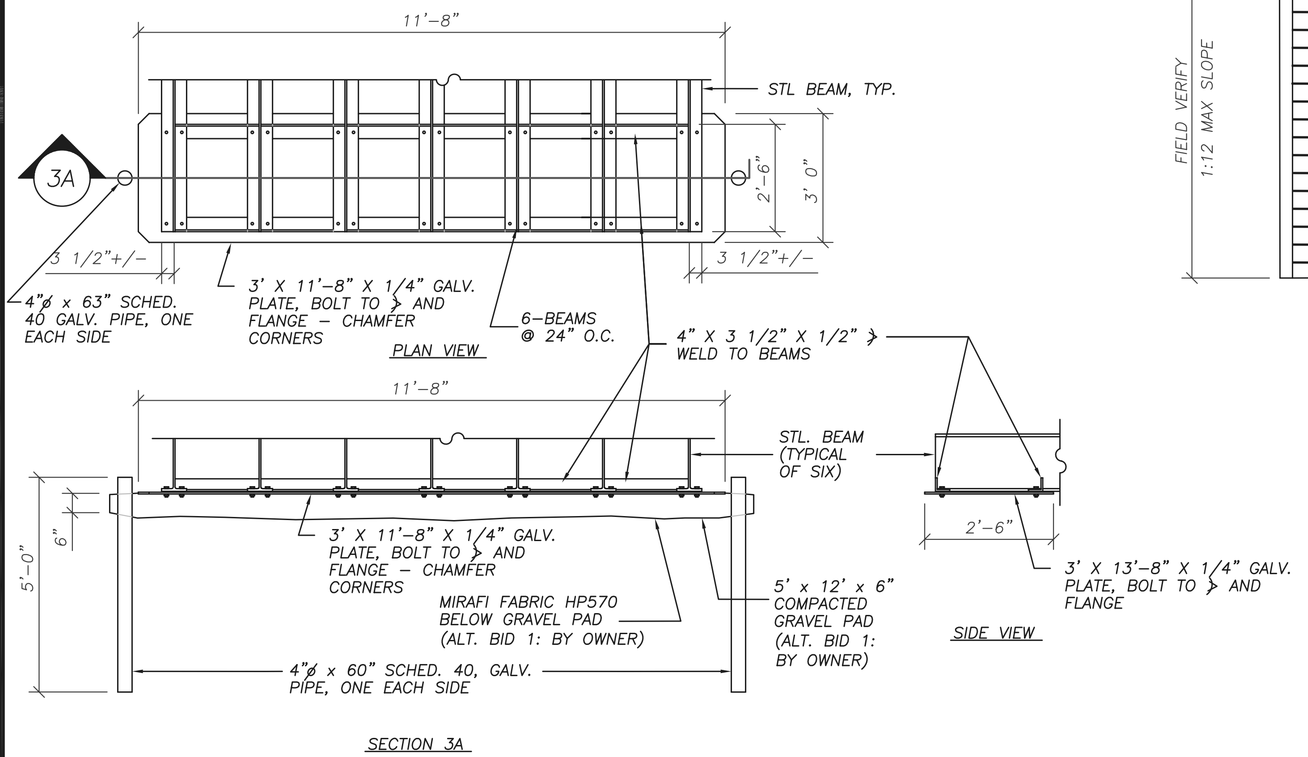

SUPPORT BASE DETAILS 3

SCALE: 1/2" = 1'-0"

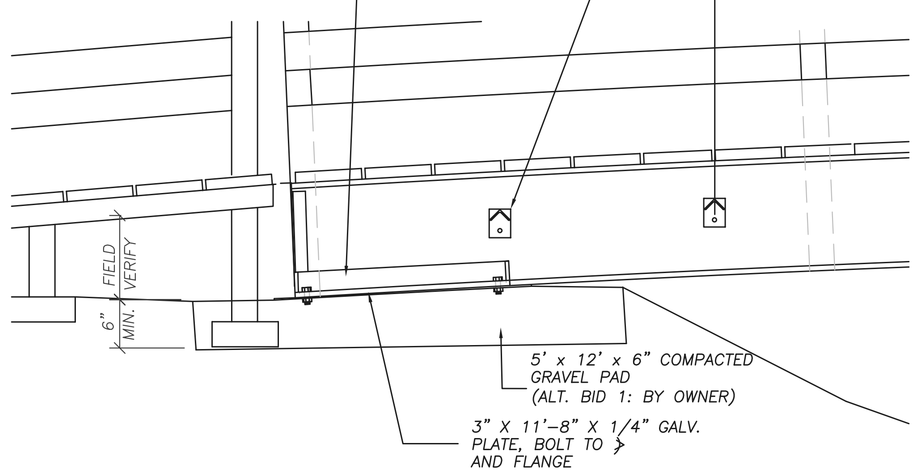

BASE CONNECTION DETAIL 6

SCALE: 1" = 1'-0"

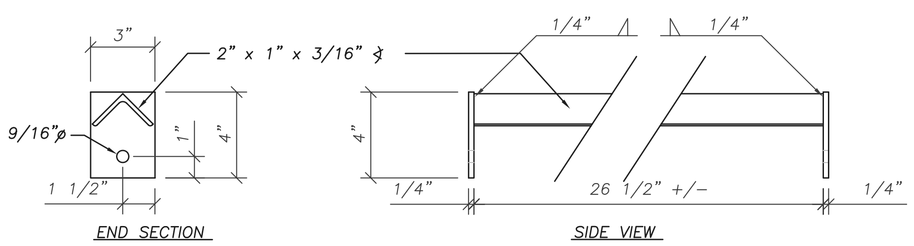

BRACING DETAILS 4

SCALE: 3" = 1'-0"

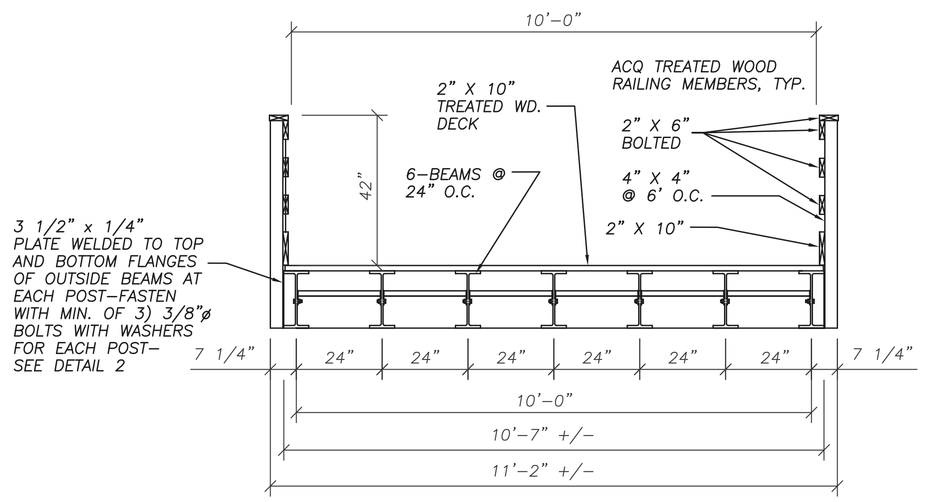

SECTION 5

SCALE: 1/2" = 1'-0"

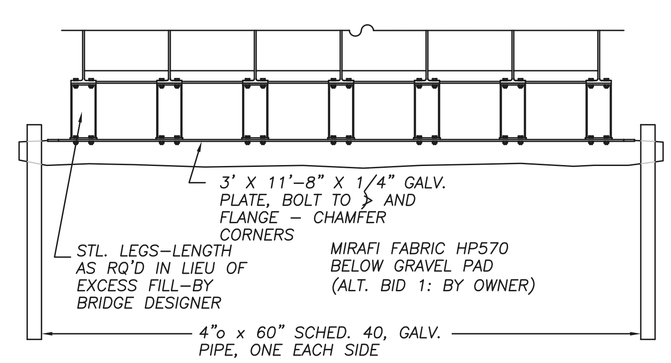

SUPPORT BASE DETAILS 7

SCALE: 1/2" = 1'-0"

GENERAL NOTES:

FIELD VERIFY ALL DIMENSIONS.
DO NOT SCALE DRAWINGS.

1. THIS BRIDGE IS DESIGNED ON THE BASIS OF THE WIS`

EST

BENDING MOMENT:
A UNIFORM LIVE LOAD OF 30 PSF APPLIED TO THE ENTIRE DECK SURFACE PLUS A CONCENTRATED LOAD OF 10,000 LBS. APPLIED TO AN AREA OF DECK 8 FEET WIDE BY 10 FEET LONG. THE MAXIMUM MOMENT WILL RESULT WITH THIS 6 TON LOAD AT MID-SPAN.

2. ALL DIMENSIONS ARE TO BE CROSS CHECKED WITH EXISTING FIELD DIMENSIONS AND APPROVED SHOP DRAWINGS FOR THE VARIOUS MATERIALS AND BUILDING COMPONENTS. ALL DIMENSIONAL DISCREPANCIES ARE TO BE BROUGHT TO THE ATTENTION OF THE OWNER'S ENGINEER.

3. ALL WORK IS TO BE PERFORMED IN COMPLIANCE WITH THE FEDERAL OCCUPATIONAL SAFETY AND HEALTH ACT (OSHA) AND ALL STATE OF WISCONSIN BUILDING CODES AND ZONING ORDINANCES AS THEY MAY PERTAIN TO THIS PROJECT.

SITE WORK:

1. THE OWNER IS TO VERIFY ALL CONDITIONS AT THE SITE, PARTICULARLY THE LOCATION OF ANY UNDERGROUND UTILITIES BEFORE EXCAVATION.

2. THE FOUNDATION DESIGN IS BASED UPON AN ASSUMED NET SOIL BEARING CAPACITY OF 1,500 PSF.

3. THE BEARING ELEVATION OF THE BRIDGE SHALL BE SET AT AN ELEVATION SUCH THAT AT MINIMUM THE BOTTOM CHORD ELEVATION OF THE BRIGDE SHALL BE 4'-0" ABOVE THE AVERAGE WATER ELEVATION OR AS DETERMINED BY THE DANE COUNTY DEPARTMENT OF PUBLIC WORKS.

4. ALTERNATE BID 1: OWNER SHALL PERFORM ALL GRADING AND GRAVEL PLACEMENT.

STRUCTURAL STEEL:

1. ALL STRUCTURAL STEEL USED IN THE FABRICATION AND ERECTION OF THIS BRIDGE SHALL MEET ASTM A572/A992 GRADE 50 AND SHALL HAVE A MINIMUM YIELD STRENGTH OF 50,000 PSI.

2. FASTENERS USED IN THE FABRICATION AND ERECTION OF THIS BRIDGE SHALL MEET THE REQUIREMENTS OF THE FOLLOWING SPECIFICATIONS: SAE J429-GRADE 5, SAE J429-GRADE 8 AND ASTM A307-A FOR THEIR RESPECTIVE USES. FASTENERS AND CONNECTORS IN CONTACT WITH TREATED LUMBER SHALL BE HOT-DIP GALVANIZED.

3. ALL STRUCTURAL STEEL SHALL BE PRIME PAINTED AFTER FABRICATION WITH A MINIMUM THICKNESS OF 1.4 MIL. OF PRIMER AND PAINT PER COAT.

4. FLAT CLEAR SPAN OR SINGLE SPLICE BEAMS ARE ACCEPTABLE.

DIMENSION LUMBER:

1. ALL STRUCTURAL DIMENSION LUMBER INSTALLED IN THIS PROJECT SHALL MEET THE REQUIREMENTS OF THE 2001 NATIONAL DESIGN SPECIFICATION FOR WOOD CONSTRUCTION (2001 NDS) AND SHALL BE STAMPED WITH A MINIMUM EQUIVALENT GRADE OF 2400 MSR 2.0E8, SOUTHERN PINE.

2. ALL WOOD USED IN THIS BRIDGE SHALL BE ACQ OR EQUAL PRESERVATIVE TREATED TO A MINIMUM RETENSION OF .60 POUND PER CUBIC FOOT, AFTER 19% KILN DRYED AND PER THE CHEMICAL MANUFACTURER'S INSTRUCTIONS.

3. THE MOISTURE CONTENT OF ALL LUMBER SHALL NOT EXCEED 19% AT THE TIME OF INSTALLATION. JOB SITE STORAGE OF ALL WOOD PRODUCTS SHALL PROTECT WOOD MATERIALS FROM DAMAGE DUE TO THE ELEMENTS. NO WARPED LUMBER SHALL BE USED IN THE CONSTRUCTION OF THE BRIDGE.

4. THE CONTRACTOR IS RESPONSIBLE FOR ALL TEMPORARY BRACING DURING HANDLING AND ERECTION OF THE BRIDGE STRUCTURE.

Revisions

Approved By: RJN
Scale: AS NOTED
Drawn By: JRL
Date: 8/13/12
Design By: ZJS
Bid No.: 311027

DEPARTMENT OF PUBLIC WORKS
DANE COUNTY WISCONSIN

RUSTIC PARKWAY BRIDGE
NINE SPRINGS E-WAY
MADISON, WISCONSIN
DANE COUNTY PARKS DEPARTMENT

Sheet 2 of 2

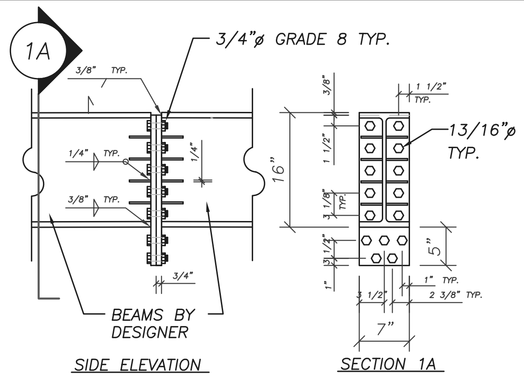

CONNECTION DETAILS 1

SCALE: 1" = 1'-0"

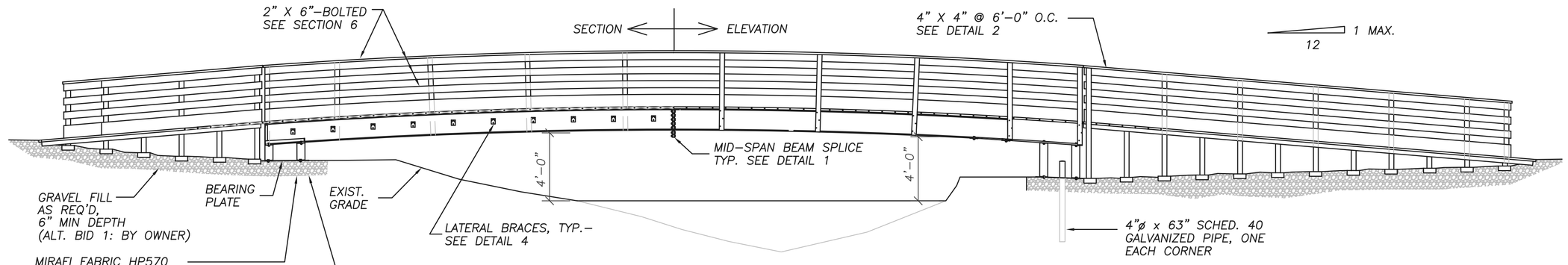

SIDE VIEW

SCALE: 1/4" = 1'-0"

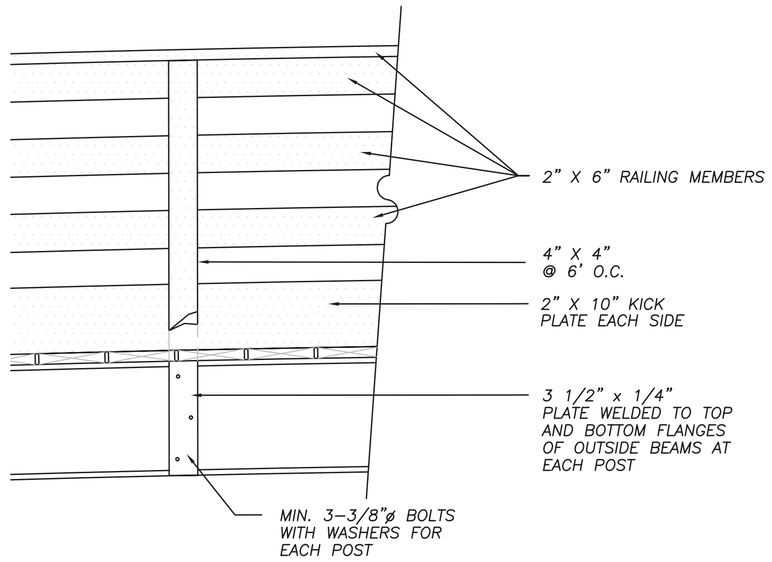

RAILING POST CONNECTION DETAIL 2

SCALE: 1" = 1'-0"

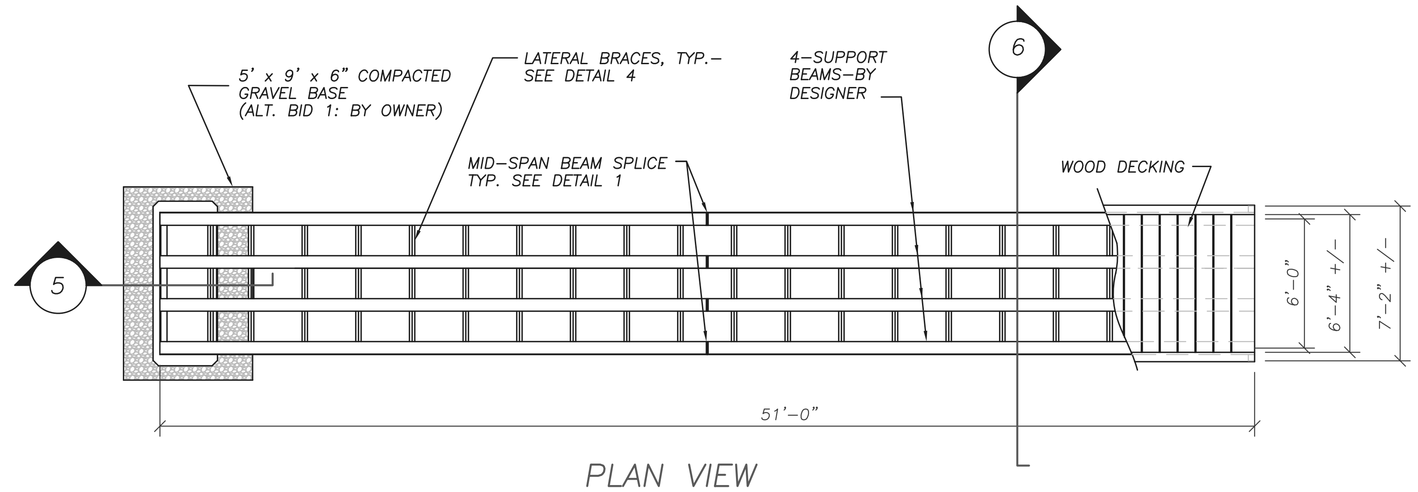

PLAN VIEW

SCALE: 1/4" = 1'-0"

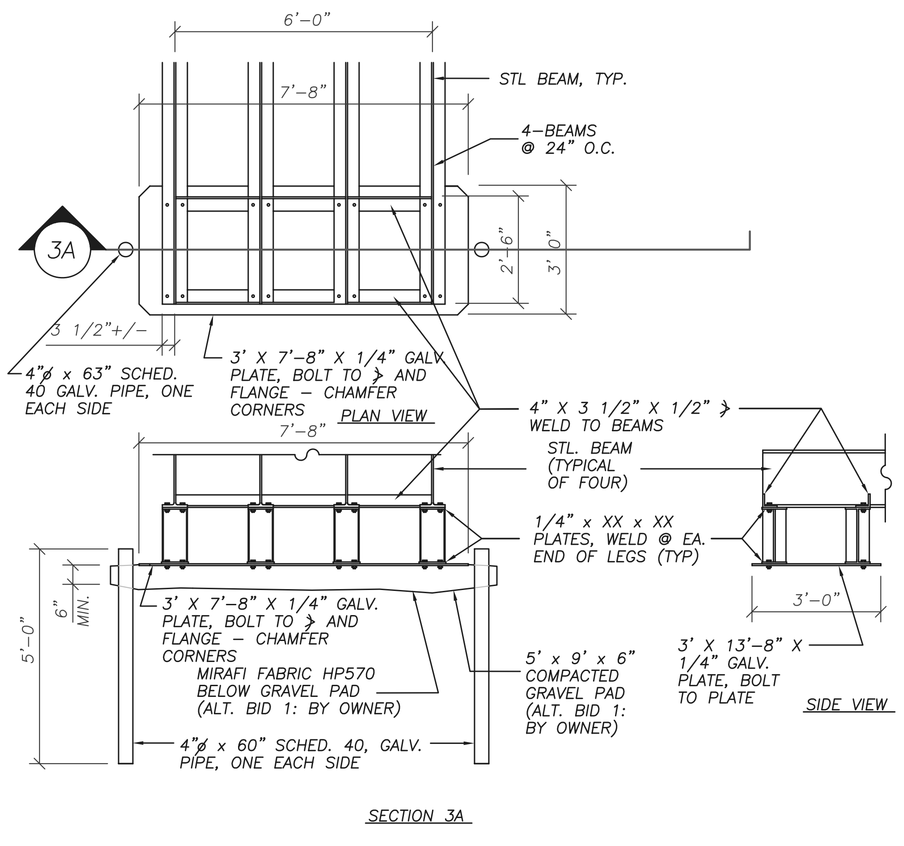

SUPPORT BASE DETAILS 3

SCALE: 1/2" = 1'-0"

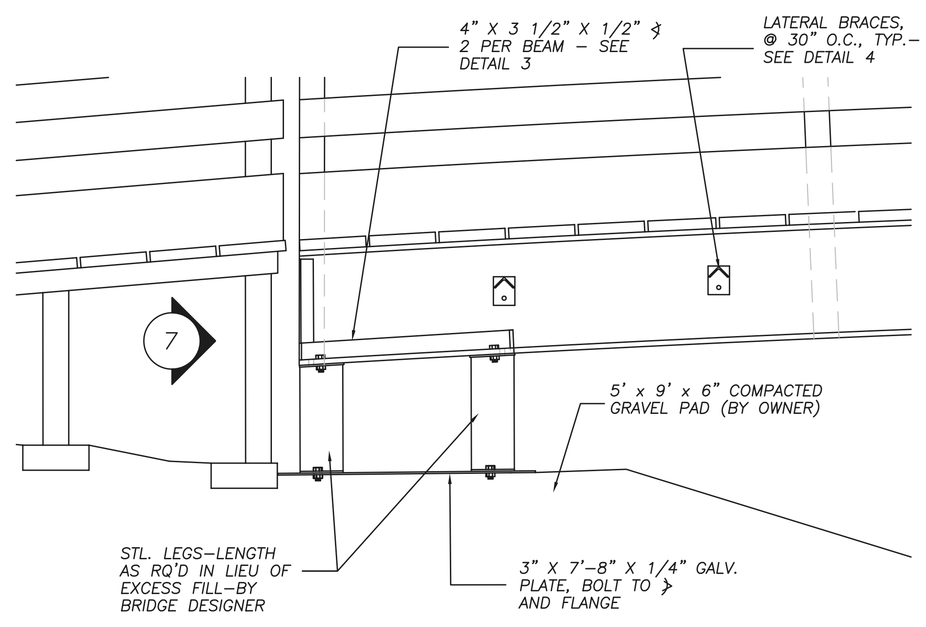

BASE CONNECTION DETAIL 5

SCALE: 1" = 1'-0"

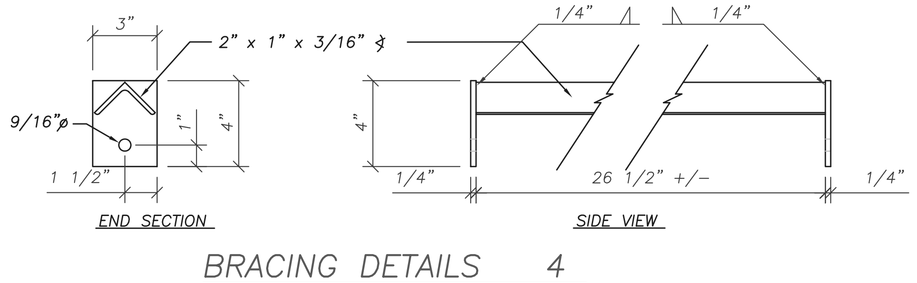

BRACING DETAILS 4

SCALE: 3" = 1'-0"

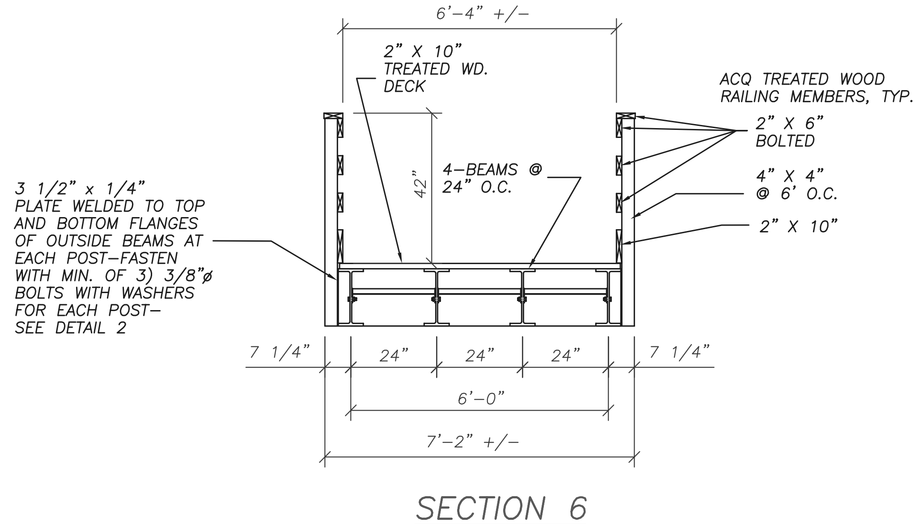

SECTION 6

SCALE: 1/2" = 1'-0"

GENERAL NOTES:

FIELD VERIFY ALL DIMENSIONS.
DO NOT SCALE DRAWINGS.

1. THIS BRIDGE IS DESIGNED ON THE BASIS OF THE WISCONSIN DEPARTMENT OF NATURAL RESOURCE'S BRIDGE GUIDELINES FOR NEW AND REPLACEMENT SNOWMOBILE AND ALL-TERRAIN VEHICLE BRIDGES, PUBLICATION PUB-CF-005 DATED 2001. THAT PUBLICATION REQUIRES THAT BRIDGES OVER 40 FEET LONG SHOULD BE DESIGNED TO MEET THE FOLLOWING LOADING REQUIREMENT WHICH CREATES THE GREATEST BENDING MOMENT:
   A UNIFORM LIVE LOAD OF 30 PSF APPLIED TO THE ENTIRE DECK SURFACE PLUS A CONCENTRATED LOAD OF 8,000 LBS. APPLIED TO AN AREA OF DECK 8 FEET WIDE BY 10 FEET LONG. THE MAXIMUM MOMENT WILL RESULT WITH THIS LOAD AT MID-SPAN.

2. ALL DIMENSIONS ARE TO BE CROSS CHECKED WITH EXISTING FIELD DIMENSIONS AND APPROVED SHOP DRAWINGS FOR THE VARIOUS MATERIALS AND BUILDING COMPONENTS. ALL DIMENSIONAL DISCREPANCIES ARE TO BE BROUGHT TO THE ATTENTION OF THE OWNER'S ENGINEER.

3. ALL WORK IS TO BE PERFORMED IN COMPLIANCE WITH THE FEDERAL OCCUPATIONAL SAFETY AND HEALTH ACT (OSHA) AND ALL STATE OF WISCONSIN BUILDING CODES AND ZONING ORDINANCES AS THEY MAY PERTAIN TO THIS PROJECT.

SITE WORK:

1. THE CONTRACTOR IS TO VERIFY ALL CONDITIONS AT THE SITE, PARTICULARLY THE LOCATION OF ANY UNDERGROUND UTILITIES BEFORE EXCAVATION.

2. THE FOUNDATION DESIGN IS BASED UPON AN ASSUMED NET SOIL BEARING CAPACITY OF 1,500 PSF.

3. THE BEARING ELEVATION OF THE BRIDGE SHALL BE SET AT AN ELEVATION SUCH THAT AT MINIMUM THE BOTTOM CHORD ELEVATION OF THE BRIGDE SHALL BE 4'-0" ABOVE THE AVERAGE WATER ELEVATION OR AS DETERMINED BY THE DANE COUNTY DEPARTMENT OF PUBLIC WORKS.

4. ALTERNATE BID 1: THE OWNER SHALL PERFORM ALL GRADING AND GRAVEL PLACEMENT.

STRUCTURAL STEEL:

1. ALL STRUCTURAL STEEL USED IN THE FABRICATION AND ERECTION OF THIS BRIDGE SHALL MEET ASTM A572/A992 GRADE 50 AND SHALL HAVE A MINIMUM YIELD STRENGTH OF 50,000 PSI.

2. FASTENERS USED IN THE FABRICATION AND ERECTION OF THIS BRIDGE SHALL MEET THE REQUIREMENTS OF THE FOLLOWING SPECIFICATIONS: SAE J429-GRADE 5, SAE J429-GRADE 8 AND ASTM A307-A FOR THEIR RESPECTIVE USES. FASTENERS AND CONNECTORS IN CONTACT WITH TREATED LUMBER SHALL BE HOT-DIP GALVANIZED.

3. ALL STRUCTURAL STEEL SHALL BE PRIME PAINTED AFTER FABRICATION WITH A MINIMUM THICKNESS OF 1.4 MIL. OF PRIMER AND PAINT PER COAT.

4. FLAT CLEAR SPAN OR SINGLE SPLICE BEAMS ARE ACCEPTABLE.

DIMENSION LUMBER:

1. ALL STRUCTURAL DIMENSION LUMBER INSTALLED IN THIS PROJECT SHALL MEET THE REQUIREMENTS OF THE 2001 NATIONAL DESIGN SPECIFICATION FOR WOOD CONSTRUCTION (2001 NDS) AND SHALL BE STAMPED WITH A MINIMUM EQUIVALENT GRADE OF 2400 MSR 2.0E8, SOUTHERN PINE.

2. ALL WOOD USED IN THIS BRIDGE SHALL BE ACQ OR EQUAL PRESERVATIVE TREATED TO A MINIMUM RETENSION OF .60 POUND PER CUBIC FOOT, AFTER 19% KILN DRYED AND PER THE CHEMICAL MANUFACTURER'S INSTRUCTIONS.

3. THE MOISTURE CONTENT OF ALL LUMBER SHALL NOT EXCEED 19% AT THE TIME OF INSTALLATION. JOB SITE STORAGE OF ALL WOOD PRODUCTS SHALL PROTECT WOOD MATERIALS FROM DAMAGE DUE TO THE ELEMENTS. NO WARPED LUMBER SHALL BE USED IN THE CONSTRUCTION OF THE BRIDGE.

4. THE CONTRACTOR IS RESPONSIBLE FOR ALL TEMPORARY BRACING DURING HANDLING AND ERECTION OF THE BRIDGE STRUCTURE,

Revisions

Approved By: RJN
Scale: AS NOTED
Drawn By: JRL
Date: 8/13/12
Design By: ZJS
Bid No.: 311027

DEPARTMENT OF PUBLIC WORKS
DANE COUNTY WISCONSIN

INDIAN SPRINGS PEDESTRIAN BRIDGE
NINE SPRINGS E-WAY
MADISON, WISCONSIN
DANE COUNTY PARKS DEPARTMENT

Sheet 1 of 2