MATERIAL SYMBOL LEGEND

- EARTH
- GRAVEL
- CONCRETE (in section) / SAND / MORTAR / STONE
- CONCRETE (in elevation)
- CONCRETE MASONRY (in section)
- BRICK (in section)
- BRICK (in elevation)
- BRICK ACCENT #1 (in elevation)
- BRICK ACCENT #2 (in elevation)
- CLAY TILE / RUBBLE
- STEEL
- WOOD FRAMING (shim/blocking)
- WOOD FRAMING (dimen. lumber)
- FINISH WOOD
- PLYWOOD
- BATT INSULATION
- RIGID INSULATION
- GLASS (in elevation)
- PLASTER / GYPSUM BOARD
- CERAMIC TILE
- TERRAZZO

DRAWING SYMBOL LEGEND

- NORTH ARROW
- NORTH ARROW (Project North & True North)
- **DETAIL REFERENCE** — Detail Number / Sheet Number
- **SECTION REFERENCE** — Section Number / Sheet Number
- **BUILDING SECTION REFERENCE** — Building Section Number / Sheet Number
- **INTERIOR ELEVATION** — Interior Elevation Number / Sheet Number
- REVISION (Cloud Around Revision)
- COLUMN GRID NUMBER
- VERTICAL ELEVATION
- ROOM NUMBER
- DOOR NUMBER
- PARTITION TYPE
- SPECIFIC DEMOLITION NOTE
- SPECIFIC ARCHITECTURAL NOTE
- WINDOW TYPE
- BORROWED LIGHT TYPE

SITE SYMBOL LEGEND

- SITE ELEVATION – 1ST FLOOR / BLDG. ELEVATION – 1ST FLOOR
- REQUIRED SPOT ELEVATION
- EXISTING SPOT ELEVATION
- EXISTING CONTOUR
- FINISHED CONTOUR
- BENCHMARK
- TEST BORING
- MANHOLE
- CATCH BASIN
- FIRE HYDRANT
- STREET LIGHTS
- POWER POLES
- EXISTING TREE TO REMAIN
- EXISTING TREE TO BE REMOVED
- PROPERTY OR BOUNDARY LINE
- HIDDEN, FUTURE, OR EXISTING CONSTR. TO BE REMOVED
- WATER MAIN
- TELEPHONE LINE
- POWER LINE
- GAS MAIN
- FUEL LINE – OIL
- SANITARY SEWER
- STORM SEWER
- DRAIN – OPEN TILE

ABBREVIATIONS

&	AND	FE	FIRE EXTINGUISHER	PC	PLUMBING CONTRACTOR
∠	ANGLE	FEB	FIRE EXTINGUISHER BRACKET	PL	PLATE
@	AT	FEC	FIRE EXTINGUISHER CABINET	PL	PROPERTY LINE
ø	DIAMETER OR ROUND	FHC	FIRE HOSE CABINET	PLAM	PLASTIC LAMINATE
#	POUND OR NUMBER	FIN	FINISH	PLAS	PLASTER
		FIX	FIXTURE	PLBG	PLUMBING
ABBR	ABBREVIATION	FL	FLOOR	PLYWD	PLYWOOD
ACOUS	ACOUSTICAL	FLUOR	FLUORESCENT	PR	PAIR
ACP	ACOUSTICAL CEILING PANEL	FOC	FACE OF CONCRETE	PT	PAINT
ADJ	ADJUSTABLE	FOS	FACE OF STUDS	PTD	PAPER TOWEL DISPENSER
AGGR	AGGREGATE	FPRF	FIREPROOFING	PTD/R	PAPER TOWEL DISPENSER/
AL	ALUMINUM	FT	FOOT / FEET		RECEPTACLE
ALT	ALTERNATE	FTG	FOOTING	PTN	PARTITION
AP	ACCESS PANEL	FURR	FURRING	PTR	PAPER TOWEL RECEPTACLE
APPROX	APPROXIMATE	FUT	FUTURE		
ARCH	ARCHITECTURAL / ARCHITECT			QT	QUARRY TILE
ASPH	ASPHALT	GA	GAUGE		
AFF	ABOVE FINISH FLOOR	GALV	GALVANIZED	R	RISER
		GB	GRAB BAR	RAD	RADIUS
BD	BOARD	GC	GENERAL CONTRACTOR	RD	ROOF DRAIN
BITUM	BITUMINOUS	GL	GLASS	REF	REFERENCE
BL	BORROWED LIGHT	GND	GROUND	REFR	REFRIGERATOR
BLDG	BUILDING	GWB	GYPSUM WALLBOARD	REINF	REINFORCED
BLKG	BLOCKING	GYP	GYPSUM	REQD	REQUIRED
BM	BEAM			RM	ROOM
BOT	BOTTOM	HB	HOSE BIB	RO	ROUGH OPENING
BO	BOTTOM OF	HC	HOLLOW CORE	RUB	RUBBER
BRG	BEARING	HDWD	HARDWOOD	RWD	REDWOOD
		HDWE	HARDWARE		
CAB	CABINET	HM	HOLLOW METAL	S	SINK
CB	CATCH BASIN	HORIZ	HORIZONTAL	SAB	SOUND ATTENUATION BLANKET
CEM	CEMENT	HR	HOUR	SB	SOIL BORING
CER	CERAMIC	HT	HEIGHT	SC	SOLID CORE
CJ	CONTROL JOINT	HVAC	HEATING, VENTILATION, & AIR CONDITIONING	SCD	SEAT COVER DISPENSER
CG	CORNER GUARD			SCHED	SCHEDULE
CKBD	CHALKBOARD			SD	SOAP DISPENSER
$	CENTER LINE	ID	INSIDE DIAMETER	SECT	SECTION
CLOS	CLOSET	IMP	INSULATED METAL PANEL	SH	SHELF
CLR	CLEAR	INSUL	INSULATION	SHR	SHOWER
CMU	CONCRETE MASONRY UNIT	INT	INTERIOR	SHT	SHEET
COL	COLUMN			SIM	SIMILAR
CONC	CONCRETE	JAN	JANITOR	SNR	SANITARY NAPKIN RECEPTACLE
CONN	CONNECTION	JT	JOINT	SNV	SANITARY NAPKIN VENDOR
CONSTR	CONSTRUCTION			SOG	SLAB ON GRADE
CONT	CONTINUOUS	KIT	KITCHEN	SPEC	SPECIFICATION
CONTR	CONTRACTOR			SQ	SQUARE
CORR	CORRIDOR	L	LENGTH	SS	STAINLESS STEEL
CPT	CARPET	LAB	LABORATORY	STA	STATION
CTSK	COUNTERSUNK	LAM	LAMINATE	STD	STANDARD
CT	CERAMIC TILE	LAV	LAVATORY	STL	STEEL
CTR	CENTER	LLH	LONG LEG HORIZONTAL	STOR	STORAGE
		LLV	LONG LEG VERTICAL	STRUC	STRUCTURAL
DBL	DOUBLE	LT	LIGHT	SUSP	SUSPENDED
DEMO	DEMOLITION	LWC	LIGHTWEIGHT CONCRETE	S. & V	STAIN & VARNISH
DEPT	DEPARTMENT			SYM	SYMMETRICAL
DF	DRINKING FOUNTAIN	MATL	MATERIAL		
DTL	DETAIL	MAX	MAXIMUM	T	TREAD
DIA	DIAMETER	MC	MECHANICAL CONTRACTOR	TEL	TELEPHONE
DIAG	DIAGONAL	MECH	MECHANICAL	TER	TERRAZZO
DIM	DIMENSION	MEMB	MEMBRANE	T & G	TONGUE & GROOVE
DISP	DISPENSER	MEP	MECHANICAL, ELECTRICAL, & PLUMBING	THK	THICK
DN	DOWN			TKBD	TACK BOARD
DO	DO OVER / DITTO	MTL	METAL	TPD	TOILET PAPER DISPENSER
DR	DOOR	MEZZ	MEZZANINE	TV	TELEVISION
DWG	DRAWING	MFR	MANUFACTURER	TYP	TYPICAL
DWL	DOWEL	MH	MANHOLE or MOP HOLDER	TOB	TOP OF BEAM
		MIN	MINIMUM	TOF	TOP OF FOOTING
EA	EACH	MIR	MIRROR	TOS	TOP OF STEEL
EC	ELECTRICAL CONTRACTOR	MISC	MISCELLANEOUS		
EJ	EXPANSION JOINT	MO	MASONRY OPENING	UNF	UNFINISHED
EL	ELEVATION	MTD	MOUNTED	UNO	UNLESS NOTED OTHERWISE
ELEC	ELECTRICAL	MUL	MULLION	UR	URINAL
ELEV	ELEVATOR				
EMER	EMERGENCY	NIC	NOT IN CONTRACT	VCT	VINYL COMPOSITION TILE
ENCL	ENCLOSURE	NP	NON POTABLE WATER	VERT	VERTICAL
EQ	EQUAL	NO. or #	NUMBER	VEST	VESTIBULE
EQUIP	EQUIPMENT	NOM	NOMINAL	VTR	VENT THROUGH ROOF
EW	EACH WAY	NTS	NOT TO SCALE	VWC	VINYL WALL COVERING
EWC	ELECTRIC WATER COOLER				
EXST	EXISTING	OA	OVERALL	W/	WITH
EXPO	EXPOSED	OC	ON CENTER	WC	WATER CLOSET
EXP	EXPANSION	OD	OUTSIDE DIAMETER	WD	WOOD
EXT	EXTERIOR	OFF	OFFICE	W/O	WITHOUT
ETR	EXISTING TO REMAIN	OFCI	OWNER FURNISHED CONTRACTOR INSTALLED	WP	WATERPROOF / WEATHERPROOF
		OFOI	OWNER FURNISHED OWNER INSTALLED	WT	WEIGHT
FCTY	FACTORY	OPNG	OPENING	WWF	WELDED WIRE FABRIC
FD	FLOOR DRAIN	OPP	OPPOSITE		
FDN	FOUNDATION				

DANE COUNTY JOB CENTER INTERIOR REMODEL

1818 ABERG AVENUE
MADISON, WISCONSIN

COUNTY BID # 109001
STRANG PROJECT # 2007070

ARCHITECTURAL DESIGN — STRANG, INC.

MECHANICAL ENGINEERING — HENNEMAN ENGINEERING, INC.

ELECTRICAL ENGINEERING — ARNOLD & O'SHERIDAN, INC.

Site Location Map

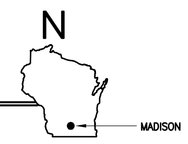

Sheet Index

ARCHITECTURAL

TS1	TITLE SHEET
C201	SITE PLAN
LS201	LIFE SAFETY PLAN
PS201	OVERALL FLOOR, PHASING, AND PARTIAL DEMOLITION PLAN
A102A	DEMOLITION REFLECTED CEILING PLAN – AREA "A"
A102B	DEMOLITION REFLECTED CEILING PLAN – AREA "B"
A102C	DEMOLITION REFLECTED CEILING PLAN – AREA "C"
A102D	DEMOLITION REFLECTED CEILING PLAN – AREA "D"
A103	ROOF DEMOLITION PLAN
A202	ROOF PLAN
A301A	REFLECTED CEILING PLAN – AREA "A"
A301B	REFLECTED CEILING PLAN – AREA "B"
A301C	REFLECTED CEILING PLAN – AREA "C"
A301D	REFLECTED CEILING PLAN – AREA "D"

HVAC

M101A	FIRST FLOOR PLAN – AREA "A" – HVAC DEMOLITION
M101B	FIRST FLOOR PLAN – AREA "B" – HVAC DEMOLITION
M101C	FIRST FLOOR PLAN – AREA "C" – HVAC DEMOLITION
M101D	FIRST FLOOR PLAN – AREA "D" – HVAC DEMOLITION
M102	ROOF PLAN – HVAC DEMOLITION
M201A	FIRST FLOOR PLAN – AREA "A" – HVAC NEW WORK DUCTWORK
M201B	FIRST FLOOR PLAN – AREA "B" – HVAC NEW WORK DUCTWORK
M201C	FIRST FLOOR PLAN – AREA "C" – HVAC NEW WORK DUCTWORK
M201D	FIRST FLOOR PLAN – AREA "D" – HVAC NEW WORK DUCTWORK
M202	ROOF PLAN – HVAC NEW WORK
M203	MECHANICAL ROOM – HVAC DEMOLITION AND NEW WORK
M301A	FIRST FLOOR PLAN – AREA "A" – HVAC NEW WORK PIPING
M301B	FIRST FLOOR PLAN – AREA "B" – HVAC NEW WORK PIPING
M301C	FIRST FLOOR PLAN – AREA "C" – HVAC NEW WORK PIPING
M301D	FIRST FLOOR PLAN – AREA "D" – HVAC NEW WORK PIPING
M401	HVAC DETAILS
M501	HVAC SCHEDULES
M502	HVAC SCHEDULES
M601	HVAC CONTROL SEQUENCES

ELECTRICAL

E201A	FLOOR PLAN AREA A – ELECTRICAL
E201B	FLOOR PLAN AREA B – ELECTRICAL
E201C	FLOOR PLAN AREA C – ELECTRICAL
E201D	FLOOR PLAN AREA D – ELECTRICAL
E301	SYMBOLS, DIAGRAMS, AND ABBREVIATIONS

STRANG

ARCHITECTURE
ENGINEERING
INTERIOR DESIGN

STRANG INC.
6411 MINERAL POINT ROAD
MADISON, WI 53705-4395

T/ 608 276 9200
F/ 608 276 9204

ISSUED FOR:
CONSTRUCTION
INTERIOR REMODEL
01-29-09

DRAWING SET	CD
COPYRIGHT STRANG, INC.	2009
FILE NAME	2007070_TS1.DWG
REVISIONS	
DRAWN	JWC
CHECKED	LLB
DATE	01-29-09
PROJECT NO.	2007070

PROJECT TITLE

DANE COUNTY
JOB CENTER
INTERIOR REMODEL
BID #109001

1819 ABERG AVENUE
MADISON, WISCONSIN

SHEET TITLE

TITLE SHEET

SHEET NO.

TS1

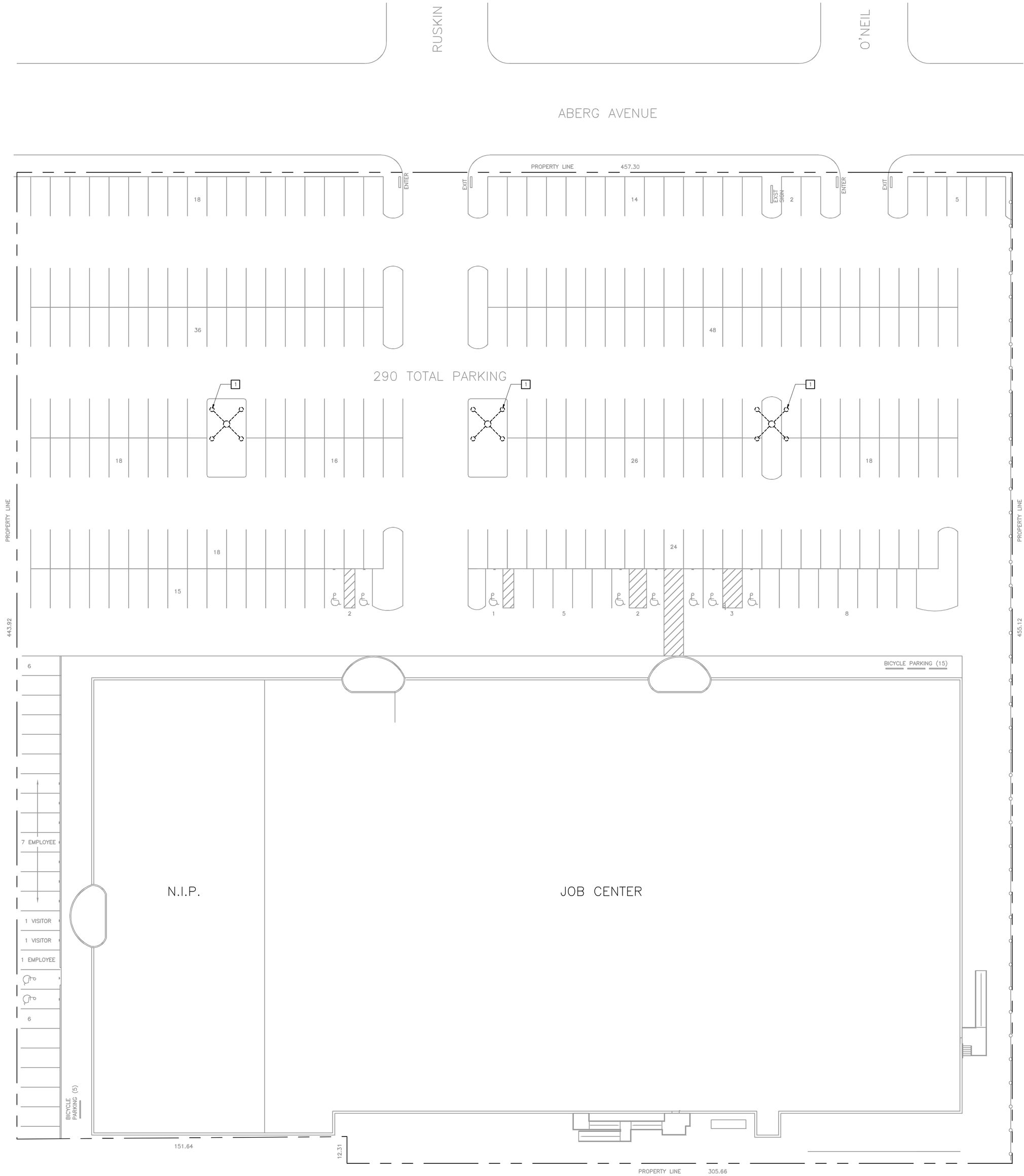

N

1 C201

SITE PLAN

SCALE: 1" = 20'-0"

GENERAL SITE PLAN NOTES:

1. REFER TO THE REFLECTED CEILING PLANS AND ELECTRICAL DRAWINGS FOR FOR LOCATIONS OF EXTERIOR BUILDING EGRESS LIGHTING.

SPECIFIC SITE PLAN NOTES:

1 ALTERNATE BID: REMOVE EXISTING LIGHT POLE FIXTURES, POLES, AND CONCRETE BASES FOR UPGRADE AND REPLACEMENT. REFER TO ELECTRICAL DRAWINGS FOR ASSOCIATED NEW WORK.

STRANG

ARCHITECTURE
ENGINEERING
INTERIOR DESIGN

STRANG INC.
6411 MINERAL POINT ROAD
MADISON, WI 53705-4395

T/ 608 276 9200
F/ 608 276 9204

ISSUED FOR:
CONSTRUCTION
INTERIOR REMODEL
01-29-09

DRAWING SET	CD
COPYRIGHT STRANG, INC.	2009
FILE NAME	2007070_C201.DWG
REVISIONS	
DRAWN	JWC
CHECKED	LLB
DATE	01-29-09
PROJECT NO.	2007070

PROJECT TITLE

DANE COUNTY JOB CENTER INTERIOR REMODEL BID #109001

1819 ABERG AVENUE
MADISON, WISCONSIN

SHEET TITLE

SITE PLAN

SHEET NO.

C201

N

1 LS201 LIFE SAFETY PLAN

SCALE: 1/16"=1'-0"

DANE COUNTY JOB CENTER

65,000 SF JOB CENTER
17,000 SF NEIGHBORHOOD INTERVENTION PROGRAM
82,000 SF TOTAL GROSS BUILDING FOOTPRINT

OCCUPANCY TYPE: BUSINESS (B) AND (E)

SEPERATED USE BETWEEN (B) AND (E)
(2) HOUR FIRE BARRIER WITH CLASS B ROOF PER 705.6 EXCEPTION 3

CONSTRUCTION CLASSIFICATION: IIB

NUMBER OF FLOOR LEVELS: 1

MAXIMUM ALLOWABLE BUILDING HEIGHT: 55'-0" ACTUAL HEIGHT: 17'-0"

FULLY SPRINKLED PER NFPA 13

FIRE-RESISTANCE RATING REQUIREMENTS FOR BUILDING ELEMENTS

STRUCTURAL FRAME (INCLUDING COLUMNS, GIRDERS, TRUSSES)	0 HOURS
BEARING WALLS - EXTERIOR	0 HOURS
NON-BEARING WALLS & PARTITIONS - INTERIOR	0 HOURS
FLOOR CONSTRUCTION (INCLUDING SUPPORTING BEAMS & JOISTS)	0 HOURS
ROOF CONSTRUCTION (INCLUDING SUPPORTING BEAMS & JOISTS)	0 HOURS
VERTICAL ENCLOSURES	0 HOURS
SEPARATION AT STORAGE ROOMS > 100 S.F.	NOT REQUIRED FULLY SPRINKLED
SEPARATION AT CORRIDOR WALLS	NOT REQUIRED FULLY SPRINKLED

OCCUPANT LOAD

FLOOR	AREA	OCCUPANTS	EXIT WIDTH REQ'D	EXIT WIDTH PROVIDED
JOB CENTER:	65,000 SF	645	96"	335"
NIP:	17,000 SF	325	49"	167.5"
TOTAL:	82,000 SF	970	145"	502.5"

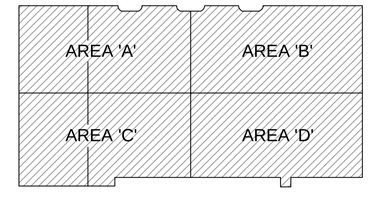

N KEY PLAN

STRANG

ARCHITECTURE
ENGINEERING
INTERIOR DESIGN

STRANG INC.
6411 MINERAL POINT ROAD
MADISON, WI 53705-4395

T/ 608 276 9200
F/ 608 276 9204

ISSUED FOR:
CONSTRUCTION
INTERIOR REMODEL
01-29-09

DRAWING SET	CD
COPYRIGHT STRANG, INC.	2009
FILE NAME	2007070_L201.DWG
REVISIONS	
DRAWN	JWC
CHECKED	LLB
DATE	01-29-09
PROJECT NO.	2007070

PROJECT TITLE

DANE COUNTY
JOB CENTER
INTERIOR REMODEL
BID #109001

1819 ABERG AVENUE
MADISON, WISCONSIN

SHEET TITLE

LIFE SAFETY
PLAN

SHEET NO.

LS201

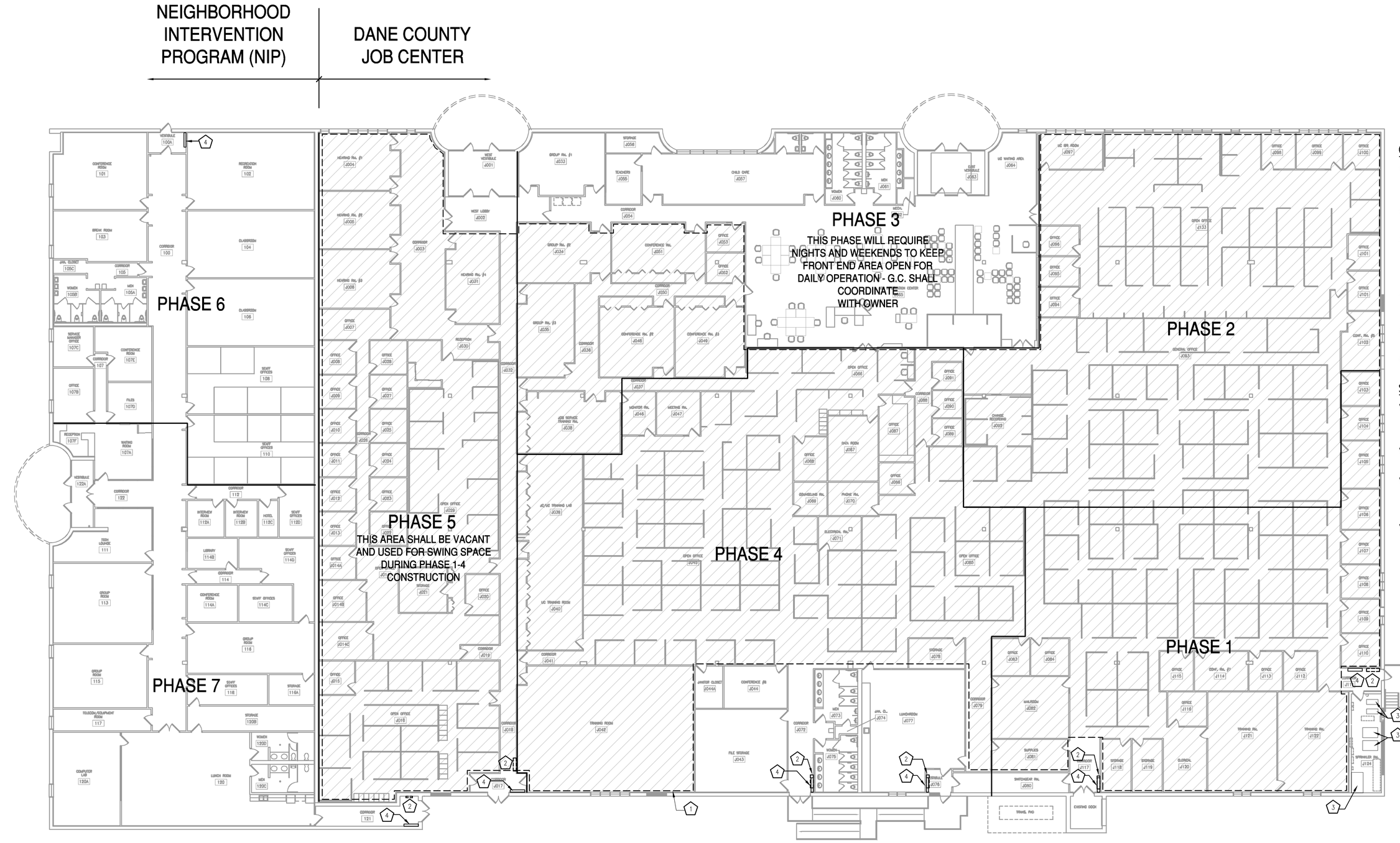

N

1 PS201

OVERALL FLOOR PLAN & PHASING PLAN

SCALE: 1/16"=1'-0"

GENERAL PLAN/PHASING NOTES:

1. THIS PLAN SHALL BE USED FOR OVERALL GENERAL PHASING. PHASING IS BASED UPON ROOFTOP UNIT ZONES. REFER TO MECHANICAL DRAWINGS FOR ADDITIONAL PHASING INFORMATION. GENERAL CONTRACTOR SHALL BE RESPONSIBLE FOR DEVELOPING A MORE DETAILED PHASING PLAN FOR CONSTRUCTION.
2. OWNER SHALL BE RESPONSIBLE FOR THE RELOCATION OF ALL MOVEABLE EQUIPMENT AND FURNITURE NOT PERMANENTLY ATTACHED TO THE FLOOR OR WALLS.
3. CONTRACTOR SHALL PROTECT IN PLACE ALL PERMANENTLY MOUNTED AND FIXED FURNITURE AND EQUIPMENT. CONTRACTOR SHALL BE RESPONSIBLE FOR ANY DAMAGES CAUSED TO SUCH FURNITURE AND EQUIPMENT. CONTRACTOR SHALL PROVIDE DUST PARTITIONS TO PROTECT EQUIPMENT AND CONTAIN CONSTRUCTION DEBRIS FROM THE SURROUNDING AREAS WHICH SHALL REMAIN IN OPERATION.
4. CONTRACTOR SHALL COORDINATE WITH COUNTY PROJECT MANAGER INDIVIDUAL PHASING TO MINIMIZE DISRUPTION OF DAILY OPERATIONS. GENERAL CONTRACTOR SHALL COORDINATE CONSTRUCTION SCHEDULE WITH OWNER.
5. PATCH WALLS FROM THE REMOVAL OF EXISTING THERMOSTATS AND OTHER WALL MOUNTED MEP EQUIPMENT. REFER TO MEP DRAWINGS FOR ADDITIONAL INFORMATION. PAINTING BY OWNER.
6. CONTRACTOR SHALL MAINTAIN EGRESS PATHS DURING CONSTRUCTION TO EXITS SHOWN ON SHEET LS201.

SPECIFIC PLAN/PHASING NOTES:

1. REMOVE EXISTING ROLL GOOD CARPETING AND ASSOCIATED PAD. PROVIDE CARPET TILE. INTERFACE FLOR COMMERCIAL, STYLE 1380102500, COLOR: 6395 CONSTRUCTION. EXTENT OF CARPET WORK SHOWN BY HATCHED AREA. CARPET SHALL BE INSTALLED AFTER ALL PHASES OF CONSTRUCTION ARE COMPLETE.
2. REMOVE EXISTING WALL MOUNTED CABINET UNIT HEATER. PATCH WALL WITH GWB AND METAL STUDS. FINISH GWB JOINTS READY FOR PAINTING. PAINTING BY OWNER.
3. PROVIDE 4" HIGH CONCRETE EQUIPMENT PAD FOR MECHANICAL/PLUMBING EQUIPMENT. REFER TO MEP DRAWINGS FOR ADDITIONAL INFORMATION. GENERAL CONTRACTOR TO COORDINATE REQUIRED PAD SIZE WITH PLUMBING AND MECHANICAL CONTRACTOR.
4. PROVIDE WALL MOUNTED CABINET UNIT HEATER. REFER TO MEP DRAWINGS FOR ADDITIONAL INFORMATION. PATCH WALL AS REQUIRED FROM INSTALLATION. FINISH GWB JOINTS READY FOR PAINTING. PAINTING BY OWNER.

GENERAL FLOOR PLAN DEMOLITION NOTES:

1. CONTRACTOR SHALL COORDINATE THE AVAILABILITY OF AREAS REQUIRING DEMOLITION WITH OWNER. SEQUENCE WORK ACCORDINGLY AND COORDINATE WITH ALL TRADES TO MINIMIZE NOISE, DUST, AND DISRUPTION.
2. THE CONTRACTOR SHALL PATCH, REPAIR, AND/OR RESTORE SURFACES SCHEDULED TO REMAIN INTACT THAT ARE DAMAGED AS A RESULT OF DEMOLITION WORK.
3. REFER TO MEP DRAWINGS FOR ADDITIONAL DEMOLITION WORK.
4. DEMOLITION PLANS ARE NOT NECESSARILY INCLUSIVE OF ALL ITEMS NEEDING REMOVAL. COORDINATE WITH ALL OTHER DRAWINGS AND FIELD VERIFY EXISTING CONDITIONS.
5. THE OWNER SHALL BE RESPONSIBLE FOR THE REMOVAL OF ALL EXISTING MOVEABLE FURNITURE AND EQUIPMENT.
6. THE GENERAL CONTRACTOR SHALL BE RESPONSIBLE FOR THE DISPOSAL OF ALL DEMOLITION ITEMS NOT NOTED AS BEING SALVAGED.

SPECIFIC FLOOR PLAN DEMOLITION NOTES:

1. REMOVE EXISTING WOOD INTERIOR DOOR, FRAME, AND HARDWARE. SALVAGE DOOR, FRAME, AND HARDWARE FOR OWNERS FUTURE RE-USE.
2. REMOVE EXISTING INTERIOR PARTITION INCLUDING ANY ATTACHED ELECTRICAL, BASE, TRIM, WALLCOVERING, PANELING, PLYWOOD, OR WALL MOUNTED ACCESSORIES.
3. REMOVE EXISTING CONCRETE EQUIPMENT PAD. REFER TO MECHANICAL DRAWINGS FOR ADDITIONAL DEMOLITION WORK.

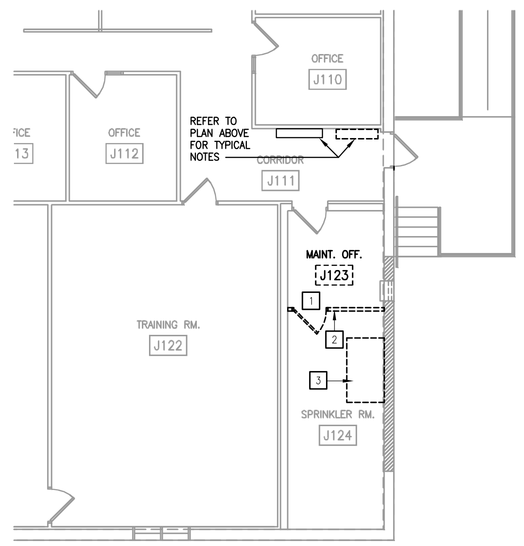

N

2 PS201

PARTIAL DEMOLITION PLAN – AREA "D"

SCALE: 1/8" = 1'-0"

STRANG

ARCHITECTURE
ENGINEERING
INTERIOR DESIGN

STRANG INC.
6411 MINERAL POINT ROAD
MADISON, WI 53705-4395

T/ 608 276 9200
F/ 608 276 9204

ISSUED FOR:
CONSTRUCTION
INTERIOR REMODEL
01-29-09

DRAWING SET	CD
COPYRIGHT STRANG, INC.	2009
FILE NAME	2007070_PS201.DWG
REVISIONS	
DRAWN	JWC
CHECKED	LLB
DATE	01-29-09
PROJECT NO.	2007070

PROJECT TITLE

DANE COUNTY
JOB CENTER
INTERIOR REMODEL
BID #109001

1819 ABERG AVENUE
MADISON, WISCONSIN

SHEET TITLE

OVERALL FLOOR PHASING, & PARTIAL DEMOLTION PLAN

SHEET NO.

PS201

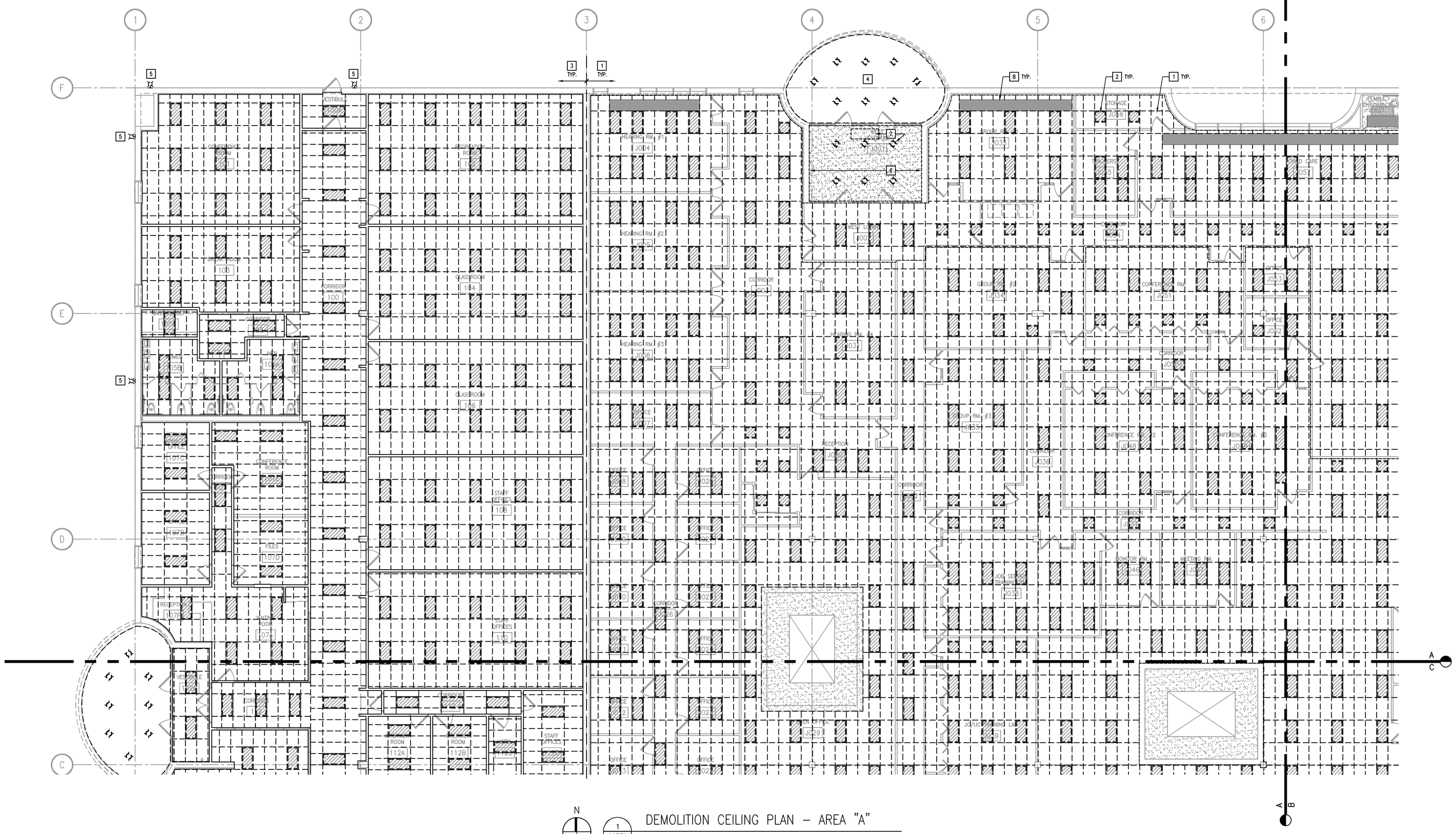
1
2
3
4
5
6
A
B
C
D
E
F
3 TYP.
1 TYP.
8 TYP.
2 TYP.
1 TYP.
VESTIBULE 100A
RECEPTION 107A
WAITING ROOM 107
CONFERENCE ROOM 107B
CORRIDOR 100
CLASSROOM 104
CLASSROOM 105
CLASSROOM 106
STAFF OFFICES 110
CONFERENCE ROOM 107C
CORRIDOR 107D
TELS 107E
CORRIDOR 107F
RECEPTION 107G
WAITING ROOM 107H
VESTIBULE 112
CORRIDOR 112
ROOM 112A
ROOM 112B
STAFF OFFICES 112C
OFFICE 102
OFFICE 102
OFFICE 102

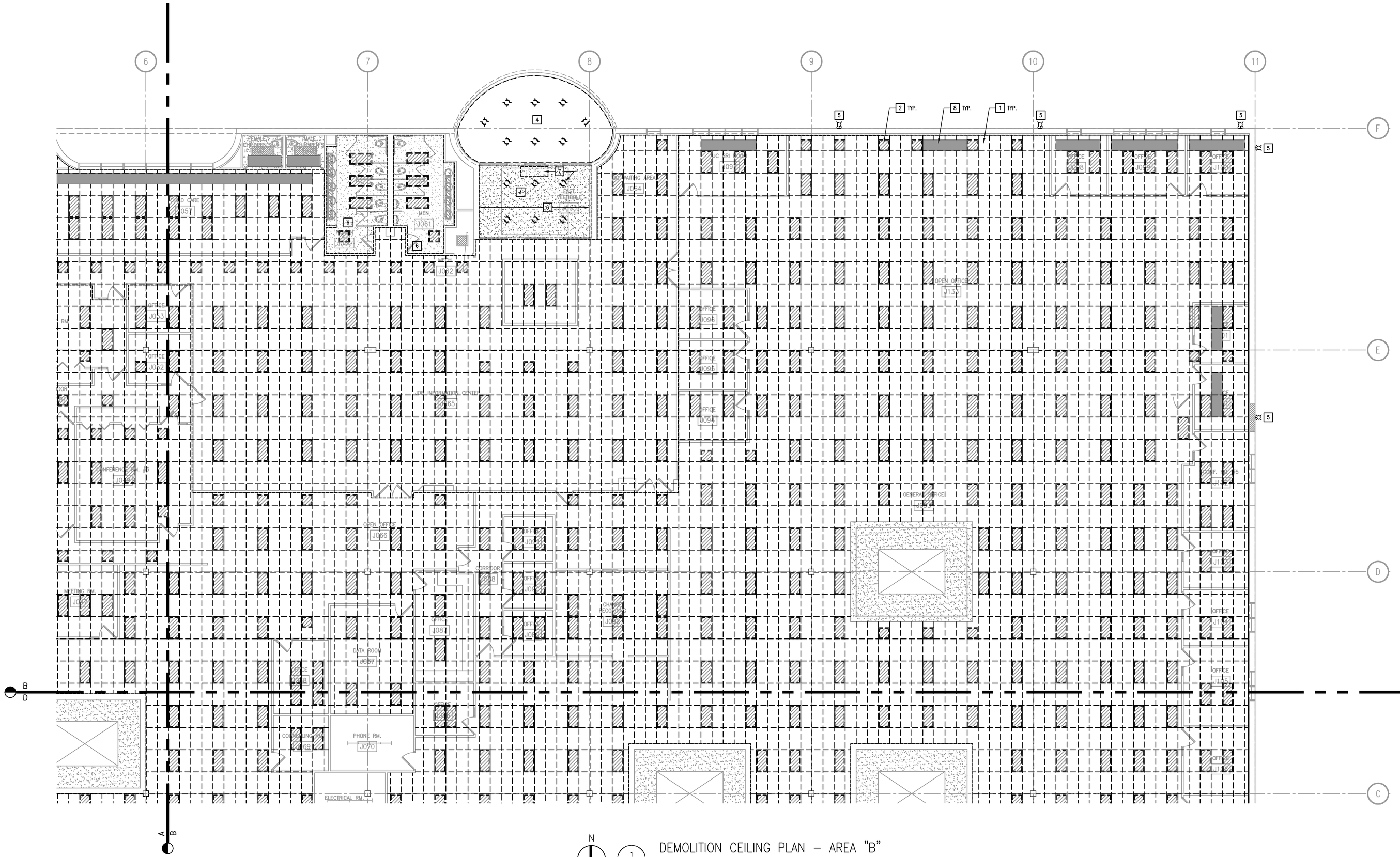
6
7
8
9
10
11
F
E
D
C
B
A
5
2 TYP.
8 TYP.
1 TYP.
4
7
6
MEN
J081
J082
J083
J084
J085
J086
J087
J088
J089
J090
J091
J092
J093
J094
J095
J096
J097
J098
J099
J0100
J0101
J0102
J0103
J0104
J0105
J0106
J0107
J0108
J0109
J0110
J0111
J0112
J0113
J0114
J0115
J0116
J0117
J0118
J0119
J0120
J0121
J0122
J0123
J0124
J0125
J0126
J0127
J0128
J0129
J0130
J0131
J0132
J0133
J0134
J0135
J0136
J0137
J0138
J0139
J0140
J0141
J0142
J0143
J0144
J0145
J0146
J0147
J0148
J0149
J0150
J0151
J0152
J0153
J0154
J0155
J0156
J0157
J0158
J0159
J0160
J0161
J0162
J0163
J0164
J0165
J0166
J0167
J0168
J0169
J0170
J0171
J0172
J0173
J0174
J0175
J0176
J0177
J0178
J0179
J0180
J0181
J0182
J0183
J0184
J0185
J0186
J0187
J0188
J0189
J0190
J0191
J0192
J0193
J0194
J0195
J0196
J0197
J0198
J0199
J0200
J0201
J0202
J0203
J0204
J0205
J0206
J0207
J0208
J0209
J0210
J0211
J0212
J0213
J0214
J0215
J0216
J0217
J0218
J0219
J0220
J0221
J0222
J0223
J0224
J0225
J0226
J0227
J0228
J0229
J0230
J0231
J0232
J0233
J0234
J0235
J0236
J0237
J0238
J0239
J0240
J0241
J0242
J0243
J0244
J0245
J0246
J0247
J0248
J0249
J0250
J0251
J0252
J0253
J0254
J0255
J0256
J0257
J0258
J0259
J0260
J0261
J0262
J0263
J0264
J0265
J0266
J0267
J0268
J0269
J0270
J0271
J0272
J0273
J0274
J0275
J0276
J0277
J0278
J0279
J0280
J0281
J0282
J0283
J0284
J0285
J0286
J0287
J0288
J0289
J0290
J0291
J0292
J0293
J0294
J0295
J0296
J0297
J0298
J0299
J0300
J0301
J0302
J0303
J0304
J0305
J0306
J0307
J0308
J0309
J0310
J0311
J0312
J0313
J0314
J0315
J0316
J0317
J0318
J0319
J0320
J0321
J0322
J0323
J0324
J0325
J0326
J0327
J0328
J0329
J0330
J0331
J0332
J0333
J0334
J0335
J0336
J0337
J0338
J0339
J0340
J0341
J0342
J0343
J0344
J0345
J0346
J0347
J0348
J0349
J0350
J0351
J0352
J0353
J0354
J0355
J0356
J0357
J0358
J0359
J0360
J0361
J0362
J0363
J0364
J0365
J0366
J0367
J0368
J0369
J0370
J0371
J0372
J0373
J0374
J0375
J0376
J0377
J0378
J0379
J0380
J0381
J0382
J0383
J0384
J0385
J0386
J0387
J0388
J0389
J0390
J0391
J0392
J0393
J0394
J0395
J0396
J0397
J0398
J0399
J0400
J0401
J0402
J0403
J0404
J0405
J0406
J0407
J0408
J0409
J0410
J0411
J0412
J0413
J0414
J0415
J0416
J0417
J0418
J0419
J0420
J0421
J0422
J0423
J0424
J0425
J0426
J0427
J0428
J0429
J0430
J0431
J0432
J0433
J0434
J0435
J0436
J0437
J0438
J0439
J0440
J0441
J0442
J0443
J0444
J0445
J0446
J0447
J0448
J0449
J0450
J0451
J0452
J0453
J0454
J0455
J0456
J0457
J0458
J0459
J0460
J0461
J0462
J0463
J0464
J0465
J0466
J0467
J0468
J0469
J0470
J0471
J0472
J0473
J0474
J0475
J0476
J0477
J0478
J0479
J0480
J0481
J0482
J0483
J0484
J0485
J0486
J0487
J0488
J0489
J0490
J0491
J0492
J0493
J0494
J0495
J0496
J0497
J0498
J0499
J0500
J0501
J0502
J0503
J0504
J0505
J0506
J0507
J0508
J0509
J0510
J0511
J0512
J0513
J0514
J0515
J0516
J0517
J0518
J0519
J0520
J0521
J0522
J0523
J0524
J0525
J0526
J0527
J0528
J0529
J0530
J0531
J0532
J0533
J0534
J0535
J0536
J0537
J0538
J0539
J0540
J0541
J0542
J0543
J0544
J0545
J0546
J0547
J0548
J0549
J0550
J0551
J0552
J0553
J0554
J0555
J0556
J0557
J0558
J0559
J0560
J0561
J0562
J0563
J0564
J0565
J0566
J0567
J0568
J0569
J0570
J0571
J0572
J0573
J0574
J0575
J0576
J0577
J0578
J0579
J0580
J0581
J0582
J0583
J0584
J0585
J0586
J0587
J0588
J0589
J0590
J0591
J0592
J0593
J0594
J0595
J0596
J0597
J0598
J0599
J0600
J0601
J0602
J0603
J0604
J0605
J0606
J0607
J0608
J0609
J0610
J0611
J0612
J0613
J0614
J0615
J0616
J0617
J0618
J0619
J0620
J0621
J0622
J0623
J0624
J0625
J0626
J0627
J0628
J0629
J0630
J0631
J0632
J0633
J0634
J0635
J0636
J0637
J0638
J0639
J0640
J0641
J0642
J0643
J0644
J0645
J0646
J0647
J0648
J0649
J0650
J0651
J0652
J0653
J0654
J0655
J0656
J0657
J0658
J0659
J0660
J0661
J0662
J0663
J0664
J0665
J0666
J0667
J0668
J0669
J0670
J0671
J0672
J0673
J0674
J0675
J0676
J0677
J0678
J0679
J0680
J0681
J0682
J0683
J0684
J0685
J0686
J0687
J0688
J0689
J0690
J0691
J0692
J0693
J0694
J0695
J0696
J0697
J0698
J0699
J0700
J0701
J0702
J0703
J0704
J0705
J0706
J0707
J0708
J0709
J0710
J0711
J0712
J0713
J0714
J0715
J0716
J0717
J0718
J0719
J0720
J0721
J0722
J0723
J0724
J0725
J0726
J0727
J0728
J0729
J0730
J0731
J0732
J0733
J0734
J0735
J0736
J0737
J0738
J0739
J0740
J0741
J0742
J0743
J0744
J0745
J0746
J0747
J0748
J0749
J0750
J0751
J0752
J0753
J0754
J0755
J0756
J0757
J0758
J0759
J0760
J0761
J0762
J0763
J0764
J0765
J0766
J0767
J0768
J0769
J0770
J0771
J0772
J0773
J0774
J0775
J0776
J0777
J0778
J0779
J0780
J0781
J0782
J0783
J0784
J0785
J0786
J0787
J0788
J0789
J0790
J0791
J0792
J0793
J0794
J0795
J0796
J0797
J0798
J0799
J0800
J0801
J0802
J0803
J0804
J0805
J0806
J0807
J0808
J0809
J0810
J0811
J0812
J0813
J0814
J0815
J0816
J0817
J0818
J0819
J0820
J0821
J0822
J0823
J0824
J0825
J0826
J0827
J0828
J0829
J0830
J0831
J0832
J0833
J0834
J0835
J0836
J0837
J0838
J0839
J0840
J0841
J0842
J0843
J0844
J0845
J0846
J0847
J0848
J0849
J0850
J0851
J0852
J0853
J0854
J0855
J0856
J0857
J0858
J0859
J0860
J0861
J0862
J0863
J0864
J0865
J0866
J0867
J0868
J0869
J0870
J0871
J0872
J0873
J0874
J0875
J0876
J0877
J0878
J0879
J0880
J0881
J0882
J0883
J0884
J0885
J0886
J0887
J0888
J0889
J0890
J0891
J0892
J0893
J0894
J0895
J0896
J0897
J0898
J0899
J0900
J0901
J0902
J0903
J0904
J0905
J0906
J0907
J0908
J0909
J0910
J0911
J0912
J0913
J0914
J0915
J0916
J0917
J0918
J0919
J0920
J0921
J0922
J0923
J0924
J0925
J0926
J0927
J0928
J0929
J0930
J0931
J0932
J0933
J0934
J0935
J0936
J0937
J0938
J0939
J0940
J0941
J0942
J0943
J0944
J0945
J0946
J0947
J0948
J0949
J0950
J0951
J0952
J0953
J0954
J0955
J0956
J0957
J0958
J0959
J0960
J0961
J0962
J0963
J0964
J0965
J0966
J0967
J0968
J0969
J0970
J0971
J0972
J0973
J0974
J0975
J0976
J0977
J0978
J0979
J0980
J0981
J0982
J0983
J0984
J0985
J0986
J0987
J0988
J0989
J0990
J0991
J0992
J0993
J0994
J0995
J0996
J0997
J0998
J0999

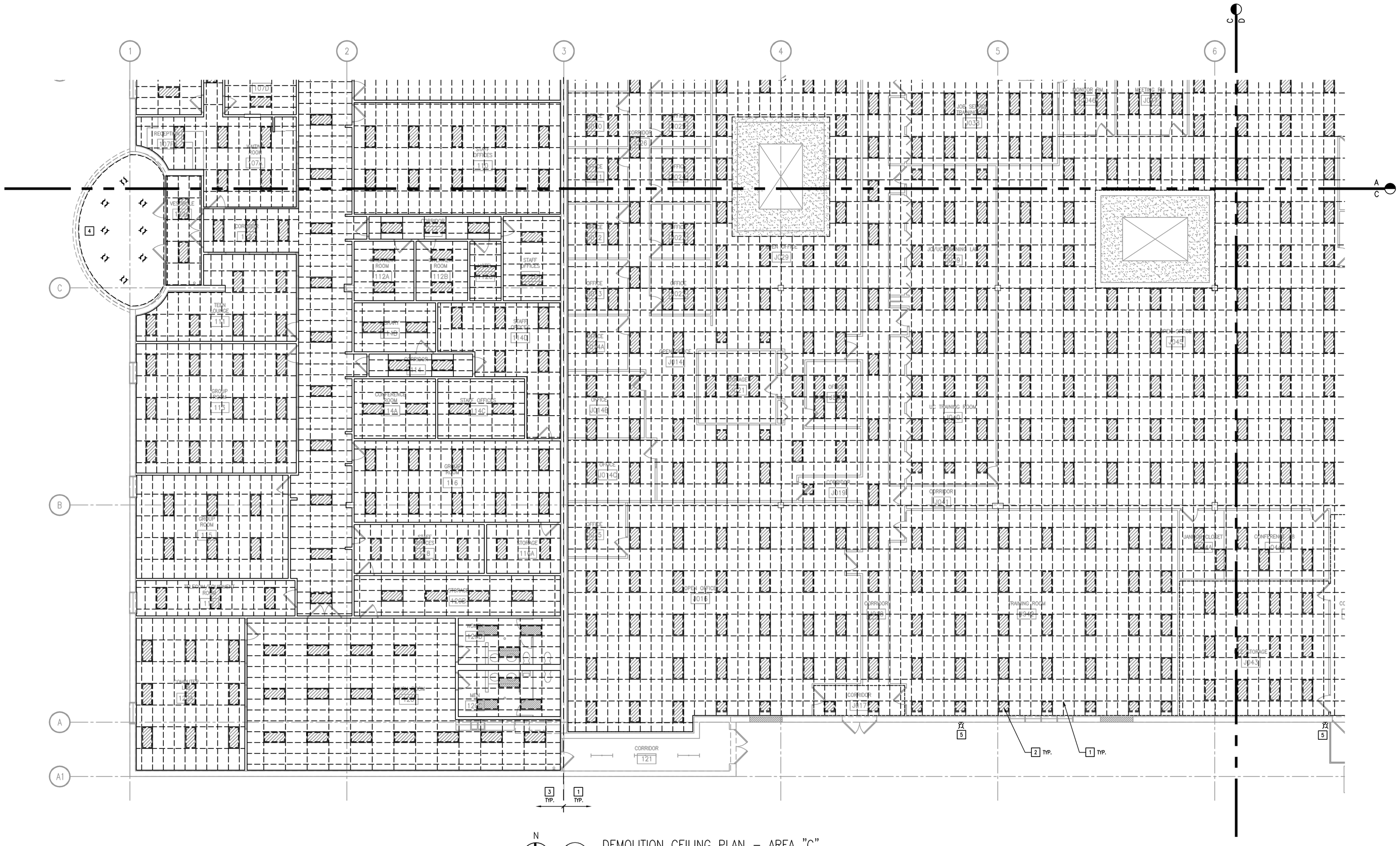

N

1 / A102C

DEMOLITION CEILING PLAN – AREA "C"

SCALE: 1/8" = 1'-0"

GENERAL CEILING PLAN DEMOLITION NOTES:

1. CONTRACTOR SHALL COORDINATE THE AVAILABILITY OF AREAS REQUIRING DEMOLITION WITH OWNER. SEQUENCE WORK ACCORDINGLY AND COORDINATE WITH ALL TRADES TO MINIMIZE NOISE, DUST, AND DISRUPTION.
2. THE CONTRACTOR SHALL PATCH, REPAIR, AND/OR RESTORE SURFACES SCHEDULED TO REMAIN INTACT THAT ARE DAMAGED AS A RESULT OF DEMOLITION WORK.
3. REFER TO MEP DRAWINGS FOR ADDITIONAL DEMOLITION WORK.
4. DEMOLITION PLANS ARE NOT NECESSARILY INCLUSIVE OF ALL ITEMS NEEDING REMOVAL. COORDINATE WITH ALL OTHER DRAWINGS AND FIELD VERIFY EXISTING CONDITIONS.
5. EXISTING CEILINGS TILES NOTED ON THE PLAN THAT ARE TO BE REMOVED, SHALL BE SALVAGED FOR RE-USE WITHIN THE NIP SPACE. CONTRACTOR SHALL COORDINATE WITH OWNER THE REQUIRED QUANTITY TO BE SALVAGED. CONTRACTOR SHALL DISPOSE OF REMAINING TILES.
6. THE GENERAL CONTRACTOR SHALL BE RESPONSIBLE FOR THE DISPOSAL OF ALL DEMOLITION ITEMS NOT NOTED AS BEING SALVAGED.
7. THE GENERAL CONTRACTOR SHALL COORDINATE WITH THE OWNER ANY EXISTING OWNER MOUNTED WALL OR CEILING EQUIPMENT THAT NEEDS TO REMOVED OR PROTECTED DURING CONSTRUCTION.

SPECIFIC CEILING PLAN DEMOLITION NOTES:

NOTE: NOTES LISTED BELOW MAY NOT ALL BE USED ON THIS SHEET.

1. EAST OF THE FIRE WALL, REMOVE EXISTING CEILING TILES AND CEILING SUSPENSION SYSTEM TO ACCOMMODATE HVAC WORK. REFER TO MEP DRAWINGS FOR ADDITIONAL WORK ASSOCIATED WITH THE REMOVAL OF THE EXISTING TILES SUCH AS TEMPORARY REMOVAL OF THE SPRINKLER HEADS.
2. EXISTING LIGHTING SHALL BE TEMPORARILY REMOVED AND STORED FOR REINSTALLATION. REFER TO ELECTRICAL DRAWINGS FOR ADDITIONAL INFORMATION.
3. WEST OF THE FIRE WALL, REMOVE EXISTING CEILING TILES AND CEILING SUSPENSION SYSTEM TO ACCOMMODATE HVAC WORK. SALVAGE EXISTING TILES WITHIN NIP SPACE FOR REINSTALLATION. REFER TO MEP DRAWINGS FOR ADDITIONAL WORK ASSOCIATED WITH THE REMOVAL OF THE EXISTING TILES SUCH AS TEMPORARY REMOVAL OF THE SPRINKLER HEADS.
4. REMOVE EXISTING PAINTED EXTERIOR GWB SOFFIT AS REQUIRED FOR THE INSTALLATION OF NEW EGRESS LIGHTING. REFER TO ELECTRICAL DRAWINGS FOR ADDITIONAL EGRESS LIGHTING DEMOLITION NOTES.
5. REMOVE EXISTING EXTERIOR EGRESS LIGHTING. REFER TO ELECTRICAL DRAWINGS FOR ADDITIONAL INFORMATION.
6. REMOVE EXISTING GWB CEILING FOR ACCESS TO MECHANICAL AND ELECTRICAL DEMOLITION. REFER TO ELECTRICAL AND MECHANICAL DRAWINGS FOR ADDITIONAL INFORMATION.
7. REMOVE EXISTING VESTIBULE RECESSED EGRESS LIGHTING AND CEILING MOUNTED CABINET UNIT HEATER. REFER TO MEP DRAWINGS FOR ADDITIONAL INFORMATION.
8. EXISTING RADIANT CEILING PANEL. REFER TO MEP DRAWINGS FOR ADDITIONAL INFORMATION.

REFLECTED CEILING DEMOLITION PLAN LEGEND

- RECESSED FLUORESCENT FIXTURE
- RADIANT PANEL
- CEILING MOUNTED CABINET UNIT HEATER
- RECESSED CAN
- WALL MOUNTED EGRESS LIGHT
- GYPSUM WALLBOARD
- ACOUSTICAL CEILING PANEL

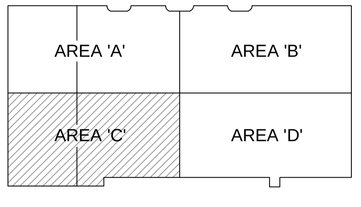

N KEY PLAN

STRANG

ARCHITECTURE
ENGINEERING
INTERIOR DESIGN

STRANG INC.
6411 MINERAL POINT ROAD
MADISON, WI 53705-4395

T/ 608 276 9200
F/ 608 276 9204

ISSUED FOR:
CONSTRUCTION
INTERIOR REMODEL
01-29-09

DRAWING SET	CD
COPYRIGHT STRANG, INC.	2009
FILE NAME	2007070_A102C.DWG
REVISIONS	
DRAWN	JWC
CHECKED	LLB
DATE	01-29-09
PROJECT NO.	2007070

PROJECT TITLE

DANE COUNTY
JOB CENTER
INTERIOR REMODEL
BID #109001

1819 ABERG AVENUE
MADISON, WISCONSIN

SHEET TITLE

DEMOLITION
CEILING PLAN
AREA "C"

SHEET NO.

A102C

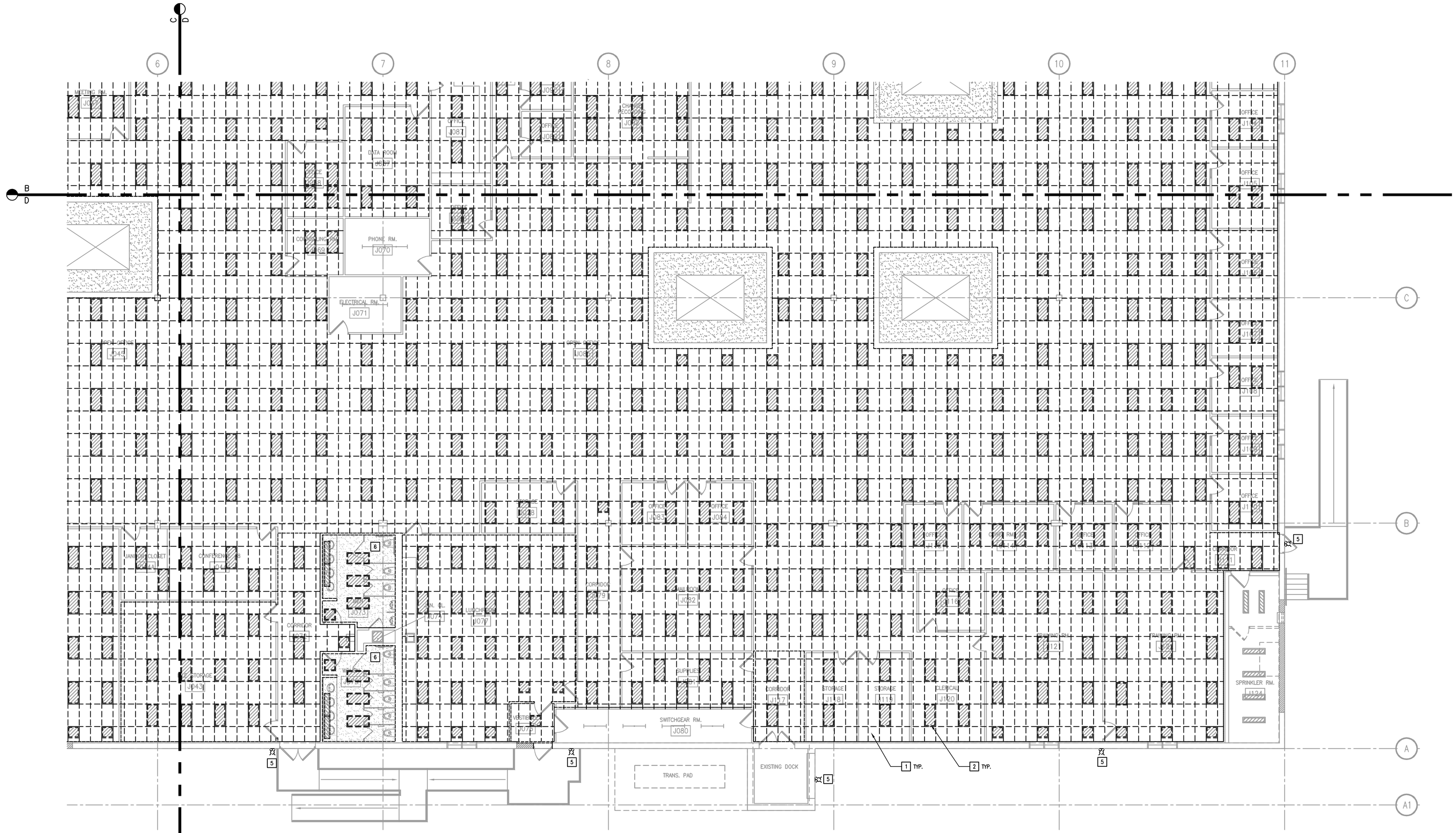

N

1 / A102D DEMOLITION CEILING PLAN – AREA "D"

SCALE: 1/8" = 1'-0"

GENERAL CEILING PLAN DEMOLITION NOTES:

1. CONTRACTOR SHALL COORDINATE THE AVAILABILITY OF AREAS REQUIRING DEMOLITION WITH OWNER. SEQUENCE WORK ACCORDINGLY AND COORDINATE WITH ALL TRADES TO MINIMIZE NOISE, DUST, AND DISRUPTION.
2. THE CONTRACTOR SHALL PATCH, REPAIR, AND/OR RESTORE SURFACES SCHEDULED TO REMAIN INTACT THAT ARE DAMAGED AS A RESULT OF DEMOLITION WORK.
3. REFER TO MEP DRAWINGS FOR ADDITIONAL DEMOLITION WORK.
4. DEMOLITION PLANS ARE NOT NECESSARILY INCLUSIVE OF ALL ITEMS NEEDING REMOVAL. COORDINATE WITH ALL OTHER DRAWINGS AND FIELD VERIFY EXISTING CONDITIONS.
5. EXISTING CEILINGS TILES NOTED ON THE PLAN THAT ARE TO BE REMOVED, SHALL BE SALVAGED FOR RE-USE WITHIN THE NIP SPACE. CONTRACTOR SHALL COORDINATE WITH OWNER THE REQUIRED QUANTITY TO BE SALVAGED. CONTRACTOR SHALL DISPOSE OF REMAINING TILES.
6. THE GENERAL CONTRACTOR SHALL BE RESPONSIBLE FOR THE DISPOSAL OF ALL DEMOLITION ITEMS NOT NOTED AS BEING SALVAGED.
7. THE GENERAL CONTRACTOR SHALL COORDINATE WITH THE OWNER ANY EXISTING OWNER MOUNTED WALL OR CEILING EQUIPMENT THAT NEEDS TO REMOVED OR PROTECTED DURING CONSTRUCTION.

SPECIFIC CEILING PLAN DEMOLITION NOTES:

NOTE: NOTES LISTED BELOW MAY NOT ALL BE USED ON THIS SHEET.

1. EAST OF THE FIRE WALL, REMOVE EXISTING CEILING TILES AND CEILING SUSPENSION SYSTEM TO ACCOMMODATE HVAC WORK. REFER TO MEP DRAWINGS FOR ADDITIONAL WORK ASSOCIATED WITH THE REMOVAL OF THE EXISTING TILES SUCH AS TEMPORARY REMOVAL OF THE SPRINKLER HEADS.
2. EXISTING LIGHTING SHALL BE TEMPORARILY REMOVED AND STORED FOR REINSTALLATION. REFER TO ELECTRICAL DRAWINGS FOR ADDITIONAL INFORMATION.
3. WEST OF THE FIRE WALL, REMOVE EXISTING CEILING TILES AND CEILING SUSPENSION SYSTEM TO ACCOMMODATE HVAC WORK. SALVAGE EXISTING TILES WITHIN NIP SPACE FOR REINSTALLATION. REFER TO MEP DRAWINGS FOR ADDITIONAL WORK ASSOCIATED WITH THE REMOVAL OF THE EXISTING TILES SUCH AS TEMPORARY REMOVAL OF THE SPRINKLER HEADS.
4. REMOVE EXISTING PAINTED EXTERIOR GWB SOFFIT AS REQUIRED FOR THE INSTALLATION OF NEW EGRESS LIGHTING. REFER TO ELECTRICAL DRAWINGS FOR ADDITIONAL EGRESS LIGHTING DEMOLITION NOTES.
5. REMOVE EXISTING EXTERIOR EGRESS LIGHTING. REFER TO ELECTRICAL DRAWINGS FOR ADDITIONAL INFORMATION.
6. REMOVE EXISTING GWB CEILING FOR ACCESS TO MECHANICAL AND ELECTRICAL DEMOLITION. REFER TO ELECTRICAL AND MECHANICAL DRAWINGS FOR ADDITIONAL INFORMATION.
7. REMOVE EXISTING VESTIBULE RECESSED EGRESS LIGHTING AND CEILING MOUNTED CABINET UNIT HEATER. REFER TO MEP DRAWINGS FOR ADDITIONAL INFORMATION.
8. EXISTING RADIANT CEILING PANEL. REFER TO MEP DRAWINGS FOR ADDITIONAL INFORMATION.

REFLECTED CEILING DEMOLITION PLAN LEGEND

- RECESSED FLUORESCENT FIXTURE
- RADIANT PANEL
- CEILING MOUNTED CABINET UNIT HEATER
- RECESSED CAN
- WALL MOUNTED EGRESS LIGHT
- GYPSUM WALLBOARD
- ACOUSTICAL CEILING PANEL

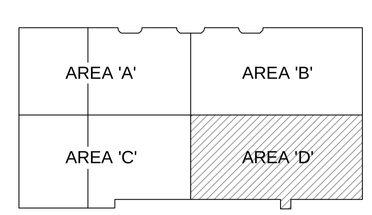

N KEY PLAN

STRANG

ARCHITECTURE
ENGINEERING
INTERIOR DESIGN

STRANG INC.
6411 MINERAL POINT ROAD
MADISON, WI 53705-4395

T/ 608 276 9200
F/ 608 276 9204

ISSUED FOR:
CONSTRUCTION
INTERIOR REMODEL
01-29-09

DRAWING SET	CD
COPYRIGHT STRANG, INC.	2009
FILE NAME	2007070_A102D.DWG
REVISIONS	
DRAWN	JWC
CHECKED	LLB
DATE	01-29-09
PROJECT NO.	2007070

PROJECT TITLE

DANE COUNTY
JOB CENTER
INTERIOR REMODEL
BID #109001

1819 ABERG AVENUE
MADISON, WISCONSIN

SHEET TITLE

DEMOLITION
CEILING PLAN -
AREA 'D'

SHEET NO.

A102D

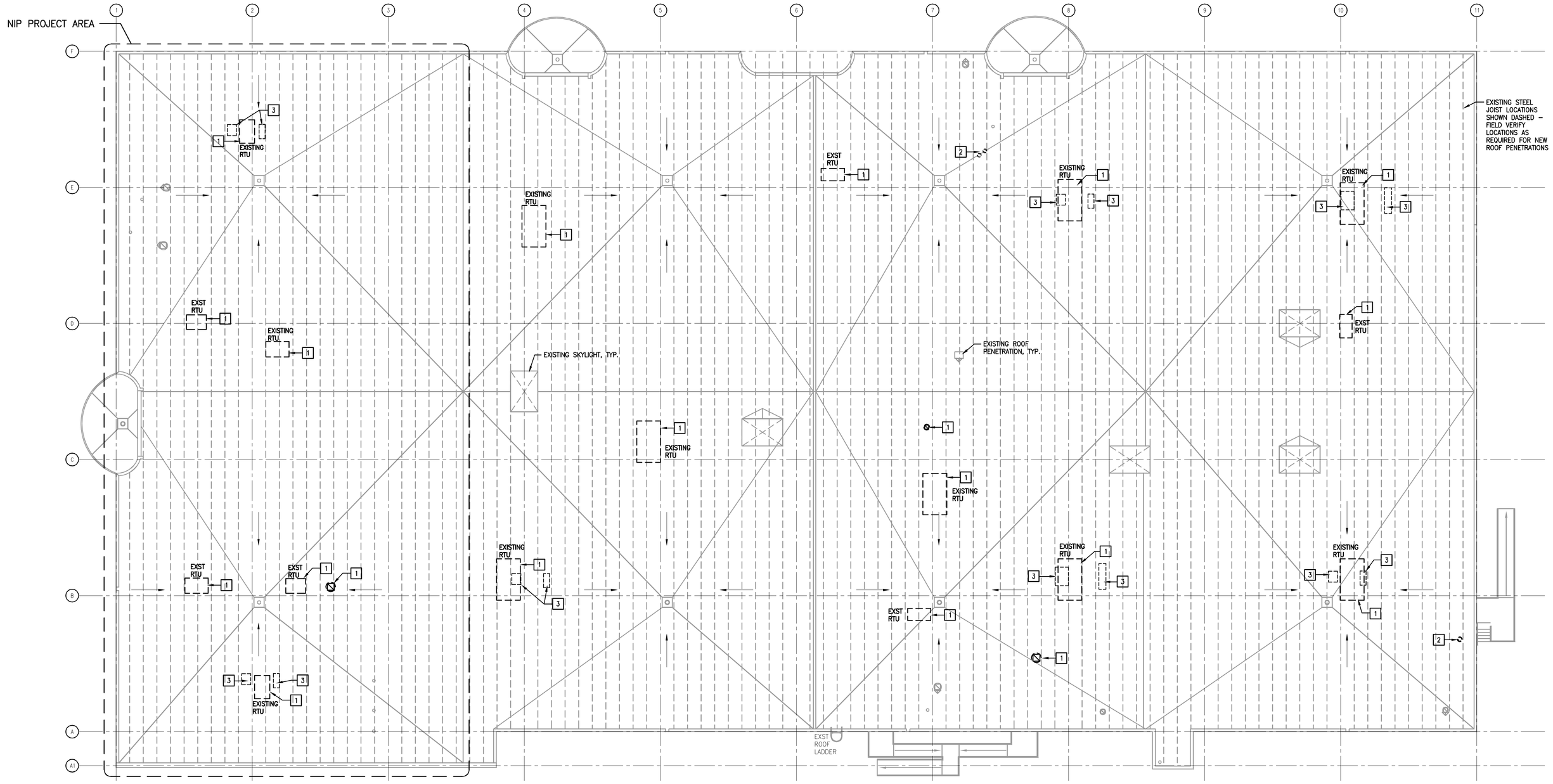

N

1 / A103 ROOF DEMOLITION PLAN

SCALE: 1/16" = 1'-0"

GENERAL ROOF PLAN DEMOLITION NOTES:

1. CONTRACTOR SHALL COORDINATE ROOF DEMOLITION WITH OWNER TO MINIMIZE NOISE DISRUPTION.
2. CONTRACTOR SHALL ATTEND PRE-BID TOUR AS NOTED WITHIN THE SPECIFICATION TO BECOME FAMILIAR WITH THE EXISTING CONDITIONS.
3. REFER TO SHEET A202 FOR NEW WORK PLANS.
4. EXISTING ROOF EQUIPMENT LOCATIONS SHOWN ON THE ABOVE PLAN MAY NOT REPLICATE EXISTING CONDITIONS. CONTRACTOR SHALL VERIFY EXISTING LOCATIONS AS REQUIRED.

SPECIFIC ROOF PLAN DEMOLITION NOTES

[1] REMOVE EXISTING ROOFTOP EQUIPMENT, CURB, AND DUCT PENETRATIONS. REFER TO MECHANICAL DRAWINGS FOR ADDITIONAL INFORMATION. FIELD VERIFY EXISTING CONDITION AND LOCATIONS. REFER TO SHEET A202 FOR PATCHWORK.

[2] REMOVE EXISTING ROOF PENETRATION. REFER TO SHEET A202 FOR PATCHWORK.

[3] GENERAL LOCATION FOR NEW OPENINGS IN EXISTING ROOF DECK FOR THE INSTALLATION OF NEW ROOFTOP EQUIPMENT SUPPLY AND RETURN DUCTS. GENERAL CONTRACTOR SHALL COORDINATE WITH THE MECHANICAL CONTRACTOR THE LOCATIONS AND SIZES OF THE OPENINGS THROUGH THE METAL DECK. LOCATIONS SHALL BE PLACED BETWEEN ALL EXISTING ROOF JOISTS AND REUSE AS MANY EXISTING OPENINGS AS POSSIBLE. REFER TO SHEET A202 AND MECHANICAL DRAWINGS FOR ADDITIONAL INFORMATION.

STRANG

ARCHITECTURE
ENGINEERING
INTERIOR DESIGN

STRANG INC.
6411 MINERAL POINT ROAD
MADISON, WI 53705-4395

T/ 608 276 9200
F/ 608 276 9204

ISSUED FOR:

CONSTRUCTION
INTERIOR REMODEL
01-29-09

DRAWING SET	CD
COPYRIGHT STRANG, INC.	2009
FILE NAME	2007070_A103.DWG
REVISIONS	
DRAWN	JWC
CHECKED	LLB
DATE	01-29-09
PROJECT NO.	2007070

PROJECT TITLE

DANE COUNTY
JOB CENTER
INTERIOR REMODEL
BID #109001

1819 ABERG AVENUE
MADISON, WISCONSIN

SHEET TITLE

ROOF DEMOLTION PLAN

SHEET NO.

A103

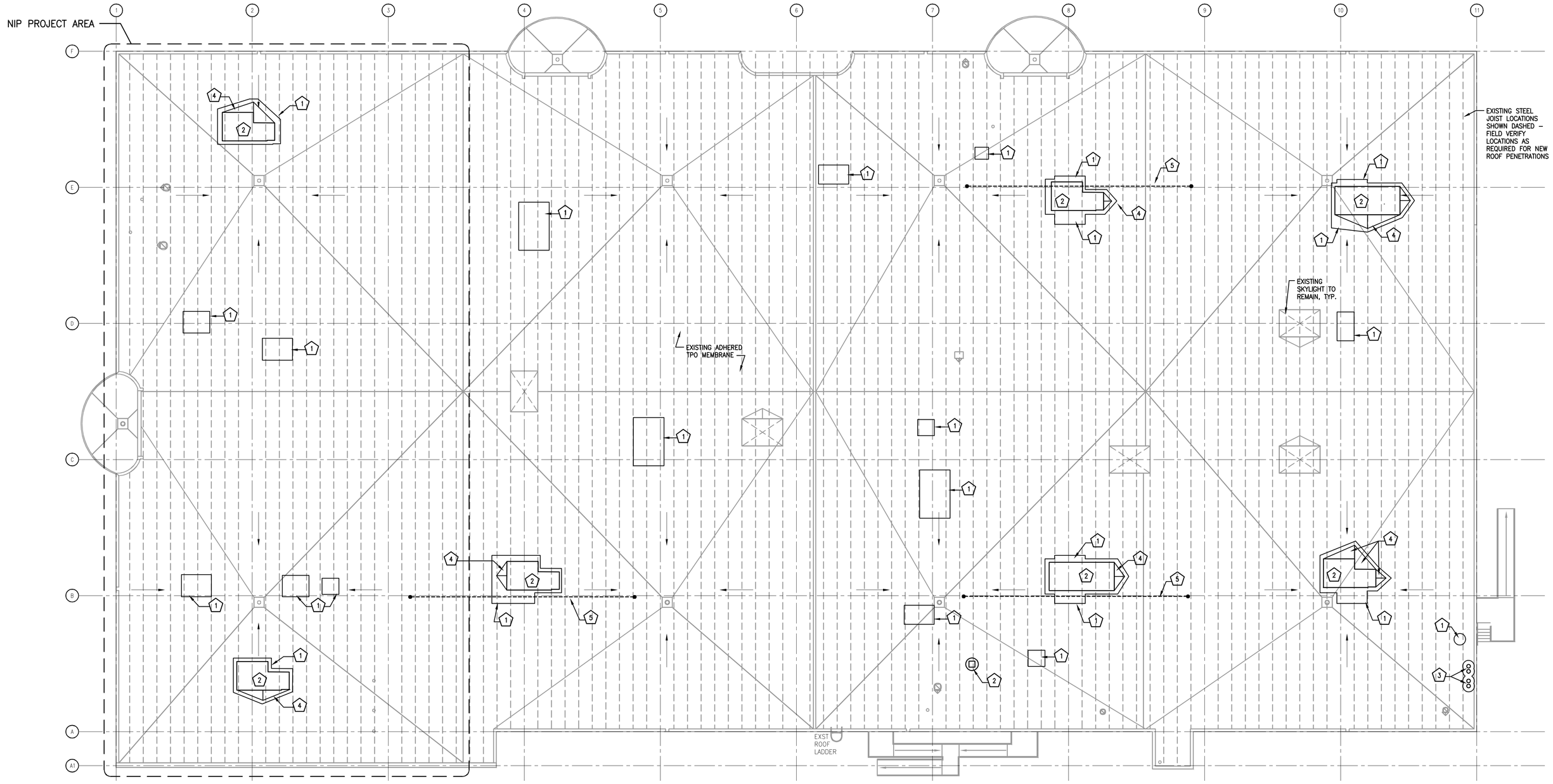

N

1 A202 ROOF PLAN

SCALE: 1/16" = 1'-0"

GENERAL ROOF PLAN NOTES:

1. CONTRACTOR SHALL COORDINATE ROOF WORK WITH OWNER TO MINIMIZE DISRUPTION.
2. PHD ROOF DOCTORS (THE ROOFING CONTRACTOR FROM PREVIOUS BID PACKAGE #1) SHALL RETURN TO THE SITE AND PATCH ROOF MEMBRANE FROM THE DEMOLITION OF THE EXISTING ROOFTOP EQUIPMENT, EXTEND MEMBRANE UP AND OVER ALL NEW ROOFTOP EQUIPMENT CURBS, AND PROVIDE CRICKETS AT NEW ROOFTOP EQUIPMENT CURBS. ALL ROOFING WORK SHALL MEET SPECIFICATIONS TO MAINTAIN THE ROOFING MEMBRANE WARRANTY. PHD ROOF DOCTORS SHALL BE CONTRACTED FOR THIS WORK THROUGH THE COUNTY AND NOT THROUGH THE GENERAL CONTRACTOR. THE GENERAL CONTRACTOR SHALL NOTIFY THE COUNTY PROJECT MANAGER AND PHD ROOF DOCTORS WITH ADVANCE NOTICE PRIOR TO THE START OF REQUIRED ROOF MEMBRANE WORK.
3. ALL WORK ASSOCIATED WITH THE EXISTING ROOFING MEMBRANE SHALL MEET ROOFING MANUFACTURER'S REQUIREMENTS TO MAINTAIN ROOFING WARRANTY.

SPECIFIC ROOF PLAN NOTES:

1. INFILL EXISTING ROOF OPENING FROM THE REMOVAL OF THE EXISTING ROOTOP EQUIPMENT AND DUCT PENETRATIONS. PATCH EXISTING TPO MEMBRANE PER ROOFING MANUFACTRURES REQUIREMENTS. REFER TO DETAIL 7/A202.
2. MECHANICAL EQUIPMENT AND CURB. REFER TO DETAIL 2/A202.
3. MECHANICAL PENETRATION PER MECHANICAL DRAWINGS. REFER TO DETAILS 3 AND 6/A202.
4. INSULATION CRICKET AT ROOFTOP EQUIPMENT.
5. REINFORCE EXISTING BEAM PER DETAILS 4 AND 5/A202.
6. PROVIDE STEEL ANGLE SUPPORT AT DUCT OPENING PER DETAIL 2/A202.

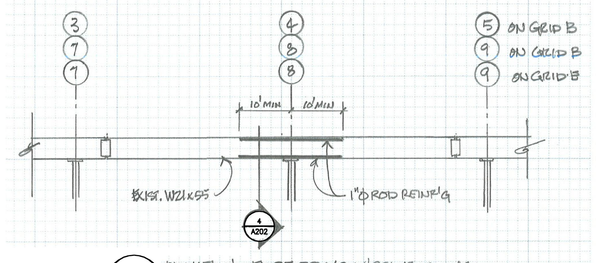

5 A202 ELEVATION - EXIST BEAMS W/ REINFORCING

NTS

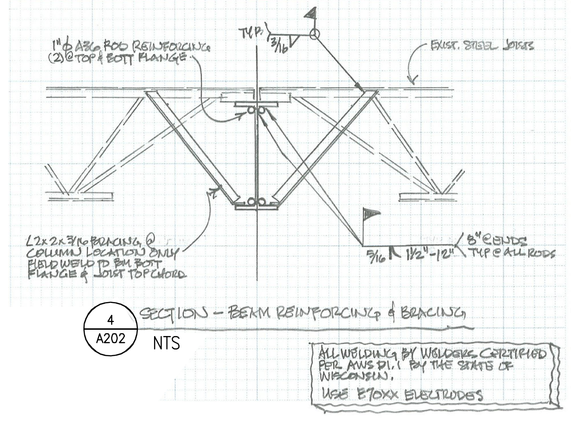

4 A202 SECTION - BEAM REINFORCING & BRACING

NTS

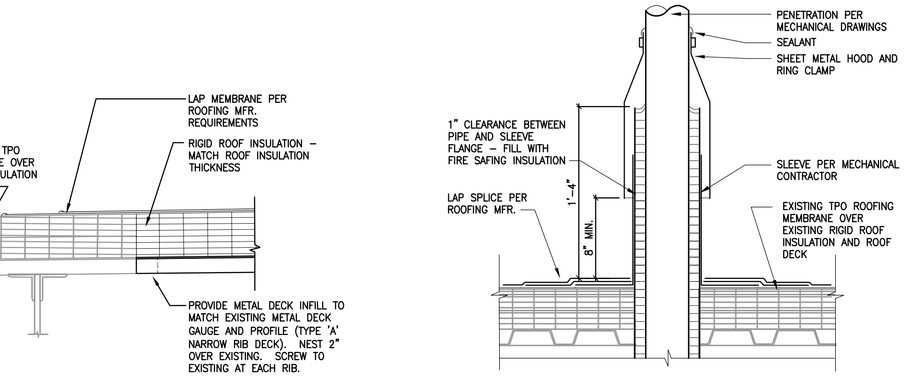

7 A202 DECK INFILL DETAIL

SCALE: 1 1/2"=1'-0"

6 A202 HOT PIPE PENETRATION DETAIL

SCALE: 1 1/2"=1'-0"

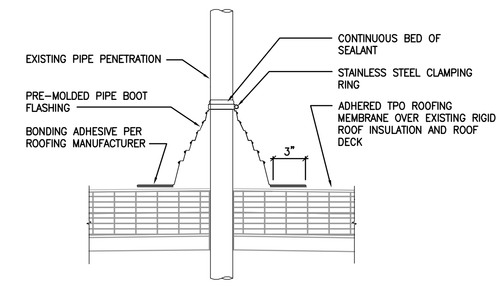

3 A202 TYPICAL COLD PIPE PENETRATION

SCALE: 1 1/2" = 1'-0"

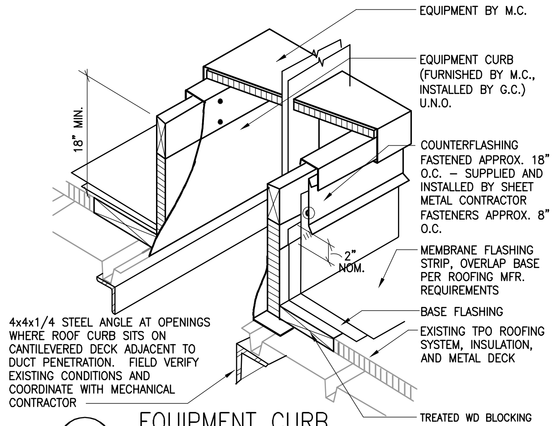

2 A202 EQUIPMENT CURB

SCALE: 1 1/2"=1'-0"

STRANG

ARCHITECTURE
ENGINEERING
INTERIOR DESIGN

STRANG INC.
6411 MINERAL POINT ROAD
MADISON, WI 53705-4395

T/ 608 276 9200
F/ 608 276 9204

ISSUED FOR:

CONSTRUCTION

INTERIOR REMODEL

01-29-09

DRAWING SET	CD
COPYRIGHT STRANG, INC.	2009
FILE NAME	2007070_A202.DWG
REVISIONS	
DRAWN	JWC
CHECKED	LLB
DATE	01-29-09
PROJECT NO.	2007070

PROJECT TITLE

DANE COUNTY
JOB CENTER
INTERIOR REMODEL
BID #109001

1819 ABERG AVENUE
MADISON, WISCONSIN

SHEET TITLE

ROOF PLAN &
ROOF DETAILS

SHEET NO.

A202

N

1 / A301A

REFLECTED CEILING PLAN – AREA "A"

SCALE: 1/8" = 1'-0"

GENERAL CEILING PLAN NOTES:

1. REFER TO MEP DRAWINGS FOR ADDITIONAL INFORMATION.
2. ANY FINISHES DAMAGED BY DEMOLTION AND NEW WORK SHALL BE PATCHED AND PAINTED TO MATCH EXISTING CONDITIONS.

SPECIFIC CEILING PLAN NOTES

NOTE: NOTES LISTED BELOW MAY NOT ALL BE USED ON THIS SHEET.

1. NEW SUSPENDED ACP CEILING GRID AND TILE. REFER TO SPECIFICATION FOR ADDITIONAL INFORMATION. CEILING HEIGHT TO MATCH EXISTING.
2. SUSPENDED ACP GRID SYSTEM WITH EXISTING SALVAGED CEILING TILES. REPLACE ANY WATER DAMAGED CEILING TILES WITHIN THIS SPACE WITH MATCHING SALVAGED TILES FROM THE JOB CENTER DEMOLITION.
3. UPGRADE EXISTING WALL MOUNTED EGRESS LIGHTING. REFER TO ELECTRICAL DRAWINGS FOR ADDITIONAL INFORMATION.
4. REINSTALL EXISTING LIGHTING. REFER TO ELECTRICAL DRAWINGS FOR ADDITIONAL INFORMATION.
5. UPGRADE RECESSED EGRESS LIGHTING. REFER TO ELECTRICAL DRAWINGS FOR ADDITIONAL INFORMATION.
6. PROVIDE 5/8" GWB OVER EXISTING METAL STUD FRAMING. JOINTS AND EDGES SHALL BE TAPED AND FINISHED READY FOR PAINTING. PAINTING BY OWNER.
7. PROVIDE 5/8" EXTERIOR GWB OVER EXISTING METAL STUD FRAMING. JOINTS AND EDGES SHALL BE TAPED AND FINISHED READY FOR PAINTING. PAINTING BY OWNER.
8. 24" x 24" CEILING ACCESS PANEL. REFER TO SPECIFICATION FOR ADDITIONAL INFORMATION.
9. CEILING MOUNTED CABINET HEATER. REFER TO MECHANICAL AND ELECTRICAL DRAWINGS FOR ADDITIONAL INFORMATION.
10. RADIANT PANEL. REFER TO MECHANICAL DRAWINGS FOR SPECIFIC LOCATIONS OF EXISTING V.S. NEW PANELS.

REFLECTED CEILING PLAN LEGEND

- EXISTING RECESSED FLUORESCENT FIXTURE
- RADIANT PANEL
- CEILING MOUNTED CABINET UNIT HEATER
- RECESSED CAN
- WALL MOUNTED EGRESS LIGHT
- RETURN AIR DIFFUSER
- SUPPLY AIR DIFFUSER
- GYPSUM WALLBOARD
- ACOUSTICAL CEILING PANEL

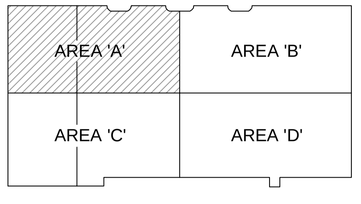

N KEY PLAN

STRANG

ARCHITECTURE
ENGINEERING
INTERIOR DESIGN

STRANG INC.
6411 MINERAL POINT ROAD
MADISON, WI 53705-4395

T/ 608 276 9200
F/ 608 276 9204

ISSUED FOR:

CONSTRUCTION
INTERIOR REMODEL
01-29-09

DRAWING SET	CD
COPYRIGHT STRANG, INC.	2009
FILE NAME	2007070_A301A.DWG
REVISIONS	
DRAWN	JWC
CHECKED	LLB
DATE	01-29-09
PROJECT NO.	2007070

PROJECT TITLE

DANE COUNTY
JOB CENTER
INTERIOR REMODEL
BID #109001

1819 ABERG AVENUE
MADISON, WISCONSIN

SHEET TITLE

REFLECTED
CEILING PLAN
AREA "A"

SHEET NO.

A301A

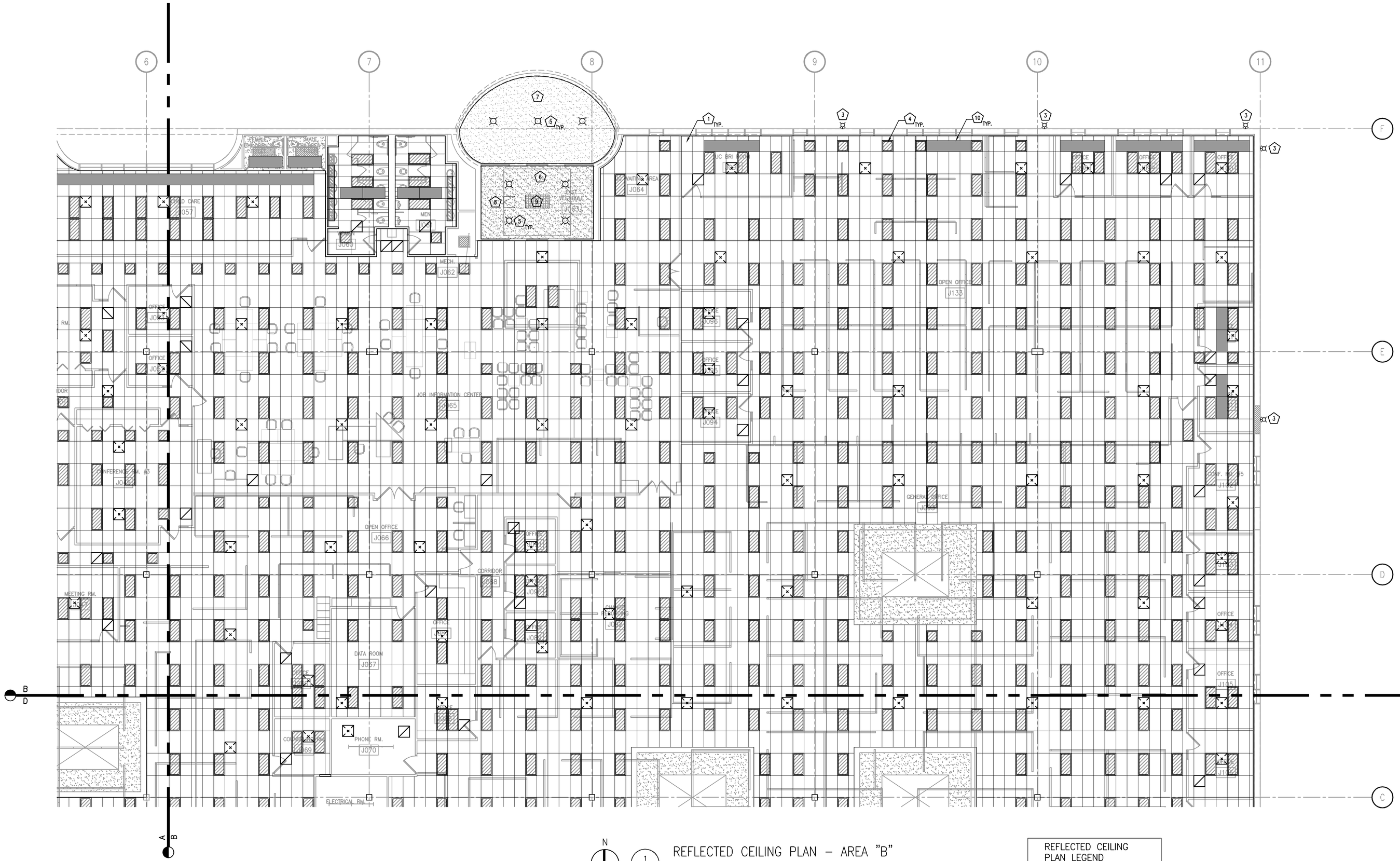
6
7
8
9
10
11
F
E
D
C
B
A
1 TYP.
3
4 TYP.
10 TYP.
5 TYP.
6
7
8
9
CHILD CARE J057
MEN
J063
WOMEN
J062
WOMEN
J064
EAST VESTIBULE J061
JUC BRIDGE
OFFICE J060
OFFICE J059
OFFICE J058
OPEN OFFICE J133
OFFICE J135
OFFICE J134
OFFICE J132
OFFICE J131
OFFICE J130
OFFICE J129
OFFICE J128
OFFICE J127
OFFICE J126
OFFICE J125
OFFICE J124
OFFICE J123
OFFICE J122
OFFICE J121
OFFICE J120
OFFICE J119
OFFICE J118
OFFICE J117
OFFICE J116
OFFICE J115
OFFICE J114
OFFICE J113
OFFICE

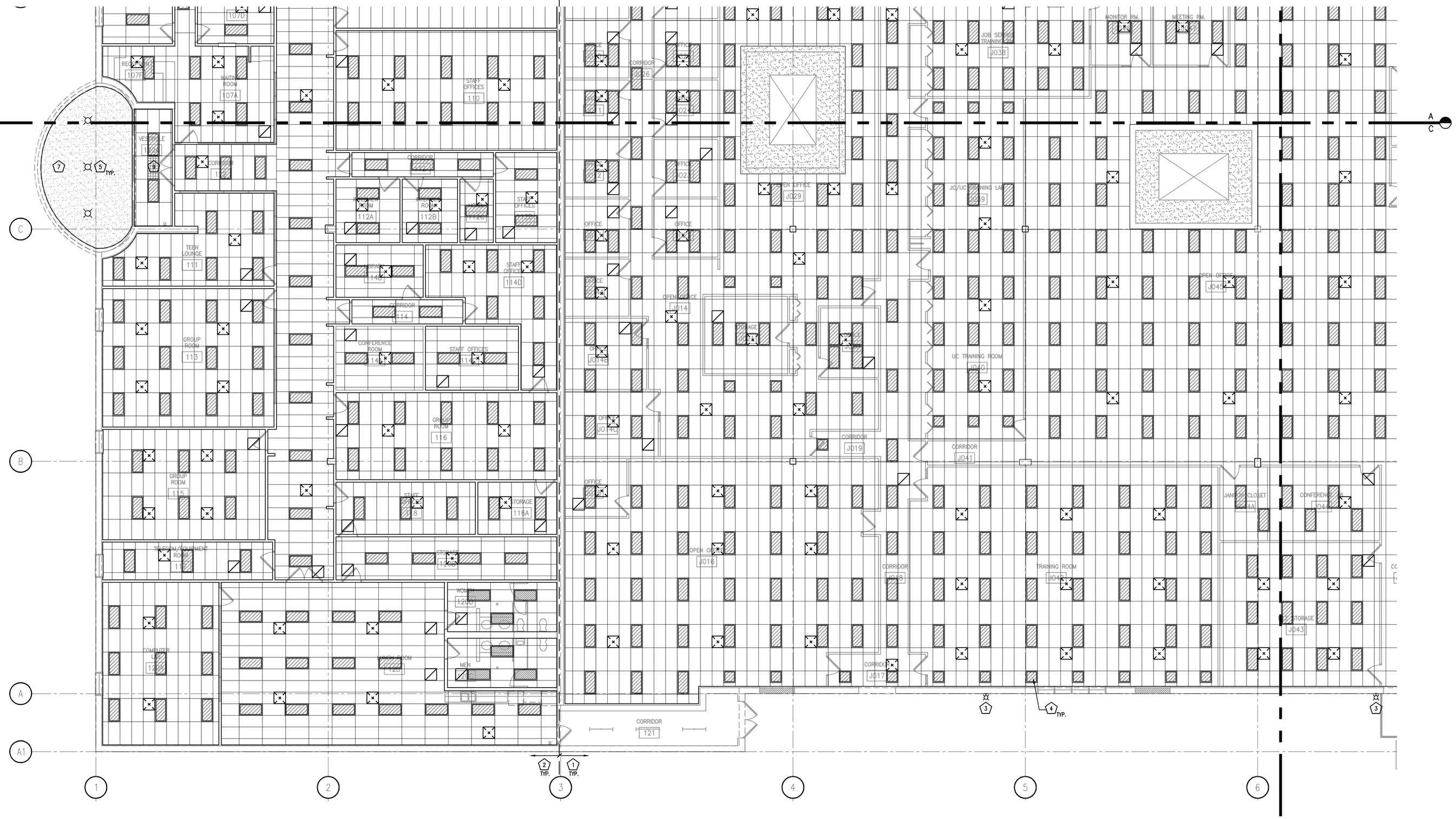

N

1 A301C

REFLECTED CEILING PLAN – AREA "C"

SCALE: 1/8" = 1'-0"

GENERAL CEILING PLAN NOTES:

1. REFER TO MEP DRAWINGS FOR ADDITIONAL INFORMATION.
2. ANY FINISHES DAMAGED BY DEMOLTION AND NEW WORK SHALL BE PATCHED AND PAINTED TO MATCH EXISTING CONDITIONS.

SPECIFIC CEILING PLAN NOTES

NOTE: NOTES LISTED BELOW MAY NOT ALL BE USED ON THIS SHEET.

1. NEW SUSPENDED ACP CEILING GRID AND TILE. REFER TO SPECIFICATION FOR ADDITIONAL INFORMATION. CEILING HEIGHT TO MATCH EXISTING.
2. SUSPENDED ACP GRID SYSTEM WITH EXISTING SALVAGED CEILING TILES. REPLACE ANY WATER DAMAGED CEILING TILES WITHIN THIS SPACE WITH MATCHING SALVAGED TILES FROM THE JOB CENTER DEMOLITION.
3. UPGRADE EXISTING WALL MOUNTED EGRESS LIGHTING. REFER TO ELECTRICAL DRAWINGS FOR ADDITIONAL INFORMATION.
4. REINSTALL EXISTING LIGHTING. REFER TO ELECTRICAL DRAWINGS FOR ADDITIONAL INFORMATION.
5. UPGRADE RECESSED EGRESS LIGHTING. REFER TO ELECTRICAL DRAWINGS FOR ADDITIONAL INFORMATION.
6. PROVIDE 5/8" GWB OVER EXISTING METAL STUD FRAMING. JOINTS AND EDGES SHALL BE TAPED AND FINISHED READY FOR PAINTING. PAINTING BY OWNER.
7. PROVIDE 5/8" EXTERIOR GWB OVER EXISTING METAL STUD FRAMING. JOINTS AND EDGES SHALL BE TAPED AND FINISHED READY FOR PAINTING. PAINTING BY OWNER.
8. 24" x 24" CEILING ACCESS PANEL. REFER TO SPECIFICATION FOR ADDITIONAL INFORMATION.
9. CEILING MOUNTED CABINET HEATER. REFER TO MECHANICAL AND ELECTRICAL DRAWINGS FOR ADDITIONAL INFORMATION.
10. RADIANT PANEL. REFER TO MECHANICAL DRAWINGS FOR SPECIFIC LOCATIONS OF EXISTING V.S. NEW PANELS.

REFLECTED CEILING PLAN LEGEND

- EXISTING RECESSED FLUORESCENT FIXTURE
- RADIANT PANEL
- CEILING MOUNTED CABINET UNIT HEATER
- RECESSED CAN
- WALL MOUNTED EGRESS LIGHT
- RETURN AIR DIFFUSER
- SUPPLY AIR DIFFUSER
- GYPSUM WALLBOARD
- ACOUSTICAL CEILING PANEL

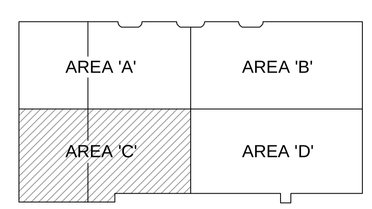

N KEY PLAN

STRANG

ARCHITECTURE
ENGINEERING
INTERIOR DESIGN

STRANG INC.
6411 MINERAL POINT ROAD
MADISON, WI 53705-4395

T/ 608 276 9200
F/ 608 276 9204

ISSUED FOR:
CONSTRUCTION
INTERIOR REMODEL
01-29-09

DRAWING SET	CD
COPYRIGHT STRANG, INC.	2009
FILE NAME	2007070_A301C.DWG
REVISIONS	
DRAWN	JWC
CHECKED	LLB
DATE	01-29-09
PROJECT NO.	2007070

PROJECT TITLE

DANE COUNTY
JOB CENTER
INTERIOR REMODEL
BID #109001

1819 ABERG AVENUE
MADISON, WISCONSIN

SHEET TITLE

REFLECTED
CEILING PLAN
AREA "C"

SHEET NO.

A301C

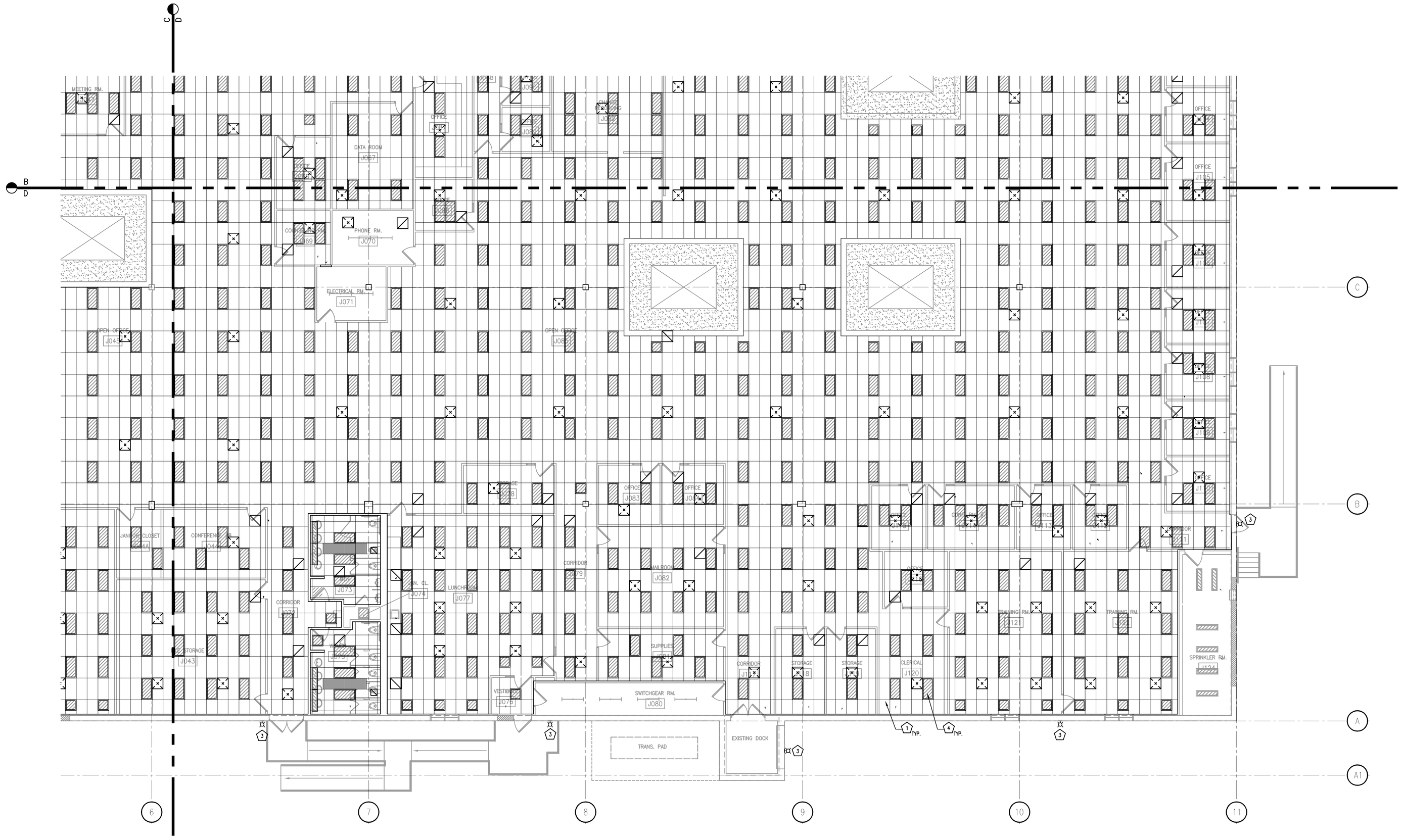

N

1 A301D

REFLECTED CEILING PLAN – AREA "D"

SCALE: 1/8" = 1'-0"

GENERAL CEILING PLAN NOTES:

1. REFER TO MEP DRAWINGS FOR ADDITIONAL INFORMATION.
2. ANY FINISHES DAMAGED BY DEMOLTION AND NEW WORK SHALL BE PATCHED AND PAINTED TO MATCH EXISTING CONDITIONS.

SPECIFIC CEILING PLAN NOTES

NOTE: NOTES LISTED BELOW MAY NOT ALL BE USED ON THIS SHEET.

1. NEW SUSPENDED ACP CEILING GRID AND TILE. REFER TO SPECIFICATION FOR ADDITIONAL INFORMATION. CEILING HEIGHT TO MATCH EXISTING.
2. SUSPENDED ACP GRID SYSTEM WITH EXISTING SALVAGED CEILING TILES. REPLACE ANY WATER DAMAGED CEILING TILES WITHIN THIS SPACE WITH MATCHING SALVAGED TILES FROM THE JOB CENTER DEMOLITION.
3. UPGRADE EXISTING WALL MOUNTED EGRESS LIGHTING. REFER TO ELECTRICAL DRAWINGS FOR ADDITIONAL INFORMATION.
4. REINSTALL EXISTING LIGHTING. REFER TO ELECTRICAL DRAWINGS FOR ADDITIONAL INFORMATION.
5. UPGRADE RECESSED EGRESS LIGHTING. REFER TO ELECTRICAL DRAWINGS FOR ADDITIONAL INFORMATION.
6. PROVIDE 5/8" GWB OVER EXISTING METAL STUD FRAMING. JOINTS AND EDGES SHALL BE TAPED AND FINISHED READY FOR PAINTING. PAINTING BY OWNER.
7. PROVIDE 5/8" EXTERIOR GWB OVER EXISTING METAL STUD FRAMING. JOINTS AND EDGES SHALL BE TAPED AND FINISHED READY FOR PAINTING. PAINTING BY OWNER.
8. 24" x 24" CEILING ACCESS PANEL. REFER TO SPECIFICATION FOR ADDITIONAL INFORMATION.
9. CEILING MOUNTED CABINET HEATER. REFER TO MECHANICAL AND ELECTRICAL DRAWINGS FOR ADDITIONAL INFORMATION.
10. RADIANT PANEL. REFER TO MECHANICAL DRAWINGS FOR SPECIFIC LOCATIONS OF EXISTING V.S. NEW PANELS.

REFLECTED CEILING PLAN LEGEND

- EXISTING RECESSED FLUORESCENT FIXTURE
- RADIANT PANEL
- CEILING MOUNTED CABINET UNIT HEATER
- RECESSED CAN
- WALL MOUNTED EGRESS LIGHT
- RETURN AIR DIFFUSER
- SUPPLY AIR DIFFUSER
- GYPSUM WALLBOARD
- ACOUSTICAL CEILING PANEL

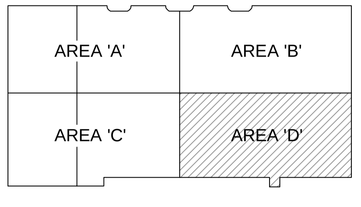

N KEY PLAN

STRANG

ARCHITECTURE
ENGINEERING
INTERIOR DESIGN

STRANG INC.
6411 MINERAL POINT ROAD
MADISON, WI 53705-4395

T/ 608 276 9200
F/ 608 276 9204

ISSUED FOR:
CONSTRUCTION
INTERIOR REMODEL
01-29-09

DRAWING SET	CD
COPYRIGHT STRANG, INC.	2009
FILE NAME	2007070_A301D.DWG
REVISIONS	
DRAWN	JWC
CHECKED	LLB
DATE	01-29-09
PROJECT NO.	2007070

PROJECT TITLE

DANE COUNTY
JOB CENTER
INTERIOR REMODEL
BID #109001

1819 ABERG AVENUE
MADISON, WISCONSIN

SHEET TITLE

REFLECTED
CEILING PLAN
AREA "D"

SHEET NO.

A301D

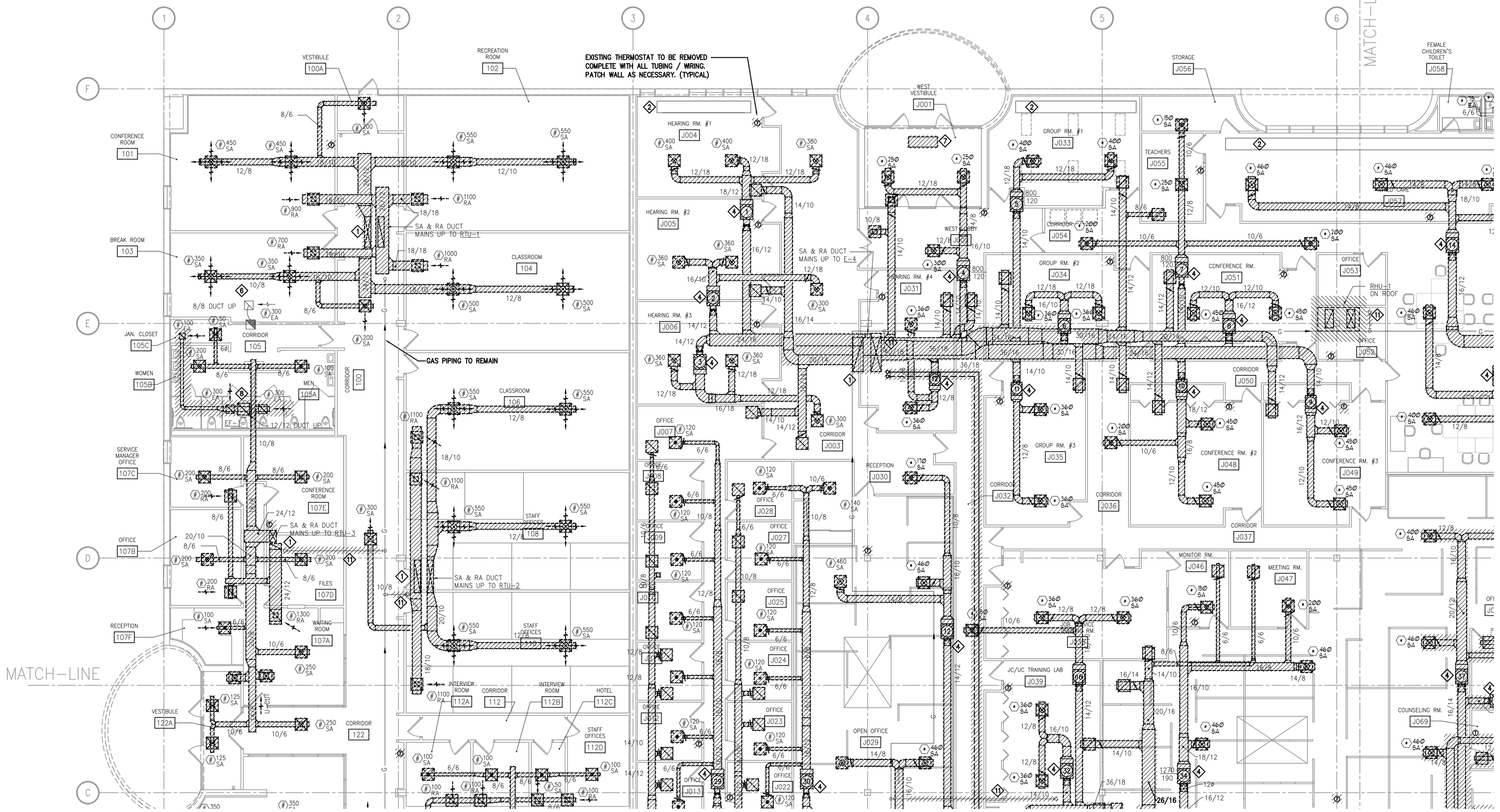

GENERAL DEMOLITION & NEW WORK NOTES:

1.) REFER TO ARCHITECTURAL PLANS, DETAILS, ELEVATIONS ETC. PRIOR TO DEVICE ROUGH-IN FOR COORDINATION PURPOSES. HVAC CONTRACTOR TO REVIEW, PRIOR TO BIDDING, ALL DRAWINGS TO COORDINATE VARIOUS WORK AS CALLED FOR. CONTRACTOR SHALL CAREFULLY CHECK ALL DRAWINGS FOR ALL TRADES AND ANY LACK OF COORDINATION BETWEEN HIS WORK AND DRAWINGS FOR JOB CONDITIONS SHALL BE IMMEDIATELY REPORTED TO THE ARCHITECT / ENGINEER.

2.) THIS CONTRACTOR SHALL VERIFY THE EXISTING CONDITIONS AT THE PROJECT SITE BEFORE SUBMITTING COST PROPOSAL. CONTR IS ADVISED THAT ALL LOCATIONS ARE APPROXIMATE.

3.) AN ATTEMPT HAS BEEN MADE TO SHOW ALL PIPING, FIXTURES, DUCTWORK, AND OUTLETS. THIS CONTRACTOR SHALL VISIT THE SITE TO VERIFY COMPONENTS, LOCATIONS AND SIZES SHOWN OR NOT SHOWN. ALL COMPONENTS NEED TO BE REMOVED OR RELOCATED IN THE DEMOLITION AREA UNLESS NOTED ON THE DRAWINGS.

4.) IT IS MANDATORY THAT THE EXISTING BLDG. REMAIN IN CONTINUOUS & NON-INTERRUPTED OPERATION DURING REMODELING/ALTERING OF THE EXISTING BLDG. THE SPECIFIC AREA(S) BEING REMODELED/ALTERED AT ANY SCHEDULED TIME ARE OBVIOUSLY EXCLUSIVE OF THIS STATEMENT. SERVICES TO EXISTING BLDG. SHALL BE KEPT ON CONTINUOUS OPERATION INCLUDING DOMESTIC WATER, SANITARY, STORM, STEAM, HEATING, HOT WATER, HVAC SUPPLY, RETURN & EXHAUST, ETC. ANY ABSOLUTELY NECESSARY INTERRUPTION OF THESE SERVICES TO ACCOMPLISH PROJECT CONSTRUCTION, SHALL BE HELD TO A MINIMUM AND ARRANGED WITH THE OWNER THROUGH THE GENERAL CONTRACTOR A MINIMUM OF TWO (2) WEEKS IN ADVANCE. TEMPORARY SERVICES SHALL BE FURNISHED AND INSTALLED WHERE NECESSARY TO ACCOMPLISH THIS PURPOSE. TEMPORARIES SHALL BE REMOVED ONLY AFTER NEW PERMANENT SERVICES ARE INSTALLED AND FULLY OPERATIONAL.

5.) THIS CONTRACTOR SHALL BE RESPONSIBLE FOR HIS OWN DEMOLITION, REMOVAL, CAPPING, STORING, ABANDONING, DISCONNECTING, RELOCATING AND RECONNECTION OF EXISTING EQUIPMENT AND MATERIAL. ALL CUTTING, PATCHING, REPAIRING, REPLACEMENT AND REFINISHING, SHALL MATCH THE EXISTING CONSTRUCTION AS NEARLY AS POSSIBLE.

6.) SHEET METAL DUCT SIZES MAY BE ALTERED TO FIT JOB CONDITIONS, BUT NET FREE AREAS MUST BE MAINTAINED. INCREASE SHEETMETAL DUCT SIZE TO ALLOW FOR DUCT LINING. DUCT LINING IS NOT AN ACCEPTABLE ALTERNATIVE TO DUCT COVERING.

7.) CONTRACTOR SHALL COORDINATE THE INSTALLATION OF THE MECHANICAL SYSTEMS WITH OTHER TRADES TO ENSURE A NEAT AND ORDERLY INSTALLATION. DUCTWORK AND PIPING SHALL BE ROUTED TO AVOID CONFLICTS WITH THE ELECTRICAL PANELS, LIGHTING FIXTURES, ETC... WHERE THERE IS EVIDENCE THAT WORK OF ONE TRADE WILL INTERFERE WITH WORK OF OTHER TRADES, ALL TRADES SHALL ASSIST IN WORKING OUT SPACE CONDITIONS IN ORDER TO MAKE SATISFACTORY ADJUSTMENTS.

8.) NEW MECHANICAL EQUIPMENT, DUCTWORK AND PIPING IS SHOWN AT APPROXIMATE LOCATIONS. CONTRACTOR SHALL FIELD MEASURE FINAL DUCTWORK AND PIPING LOCATIONS PRIOR TO FABRICATION AND SHALL MAKE ADJUSTMENTS AS REQUIRED TO FIT THE DUCTWORK AND PIPING IN THE AVAILABLE SPACE. CONTRACTOR SHALL FIELD VERIFY FINAL EQUIPMENT LOCATIONS TO INSTALL EQUIPMENT IN ACCORDANCE WITH MANUFACTURER'S WRITTEN RECOMMENDATIONS REGARDING SERVICE CLEARANCE, COIL PULLS, TUBE PULLS AND PROPER AIRFLOW CLEARANCE AROUND THE EQUIPMENT.

9.) COORDINATE THE LOCATION OF ROOF MOUNTED HVAC EQUIPMENT AND ROOF PENETRATIONS WITH THE ARCHITECTURAL AND STRUCTURAL DRAWINGS.

10.) THIS CONTRACTOR SHALL SEAL ALL PENETRATIONS THROUGH THE BUILDING COMPONENTS IN ACCORDANCE WITH THE CONTRACT SPECIFICATIONS. CONTRACTOR SHALL FIREPROOF ALL PENETRATIONS THROUGH FIRE RATED COMPONENTS IN ACCORDANCE WITH U.L. REQUIREMENTS.

11.) THIS CONTRACTOR SHALL COORDINATE THE EXACT MOUNTING SIZE AND FRAME TYPE OF DIFFUSER, REGISTER AND GRILLES WITH THE SUPPLIER TO MEET THE CEILING, WALL AND DUCT INSTALLATION REQUIREMENTS.

12.) FINAL LOCATION OF CEILING DIFFUSERS, REGISTERS AND GRILLES SHALL BE ADJUSTED AS REQUIRED TO ACCOMMODATE THE FINAL CEILING GRID AND LIGHTING LOCATIONS.

13.) REFER TO ARCHITECTURAL DRAWINGS FOR PHASING, SMOKE, AND FIRE WALLS. SEE SPECIFICATIONS & ARCHITECTURAL SHEETS FOR CONSTRUCTION PHASING REQUIREMENTS. DURING EACH PHASE, AS MUCH WORK AS POSSIBLE MUST BE PERFORMED WITHIN THE BOUNDARIES OF THAT PHASE.

14.) ALL THERMOSTATS LOCATED 4'-0" ABOVE FLOOR TO MATCH ADJACENT LIGHT SWITCHES AND WITH PLASTIC OR CAST GUARDS, AS SPECIFIED, MUST MEET A.D.A. REQUIREMENTS. ALL THERMOSTATS LOCATED ON AN EXTERIOR WALLS OR COLUMNS MUST BE INSTALLED ON THERMAL INSULATING BLOCKS.

15.) EXCEPT WHERE OTHERWISE SHOWN OR NOTED ON DRWG. – "TO BE RETAINED, RELOCATED" OR HEREINAFTER NOTED, ALL EXISTING EQUIPMENT AND MATERIAL IN AREAS TO BE REMODELED/ALTERED SHALL BE REMOVED WHERE THEY INTERFERE WITH PROPOSED NEW CONSTRUCTION &/OR INTERFERE W/PROPOSED USAGE OF SPACE BY OWNER.

(A) REMOVE ANY PIPES PROTRUDING ABOVE FINISHED FLOOR OR THROUGH WALL AND CAP AND FINISH OVER WITH MATERIAL TO MATCH EXISTING.

(B) REMOVE ALL FIXTURES, CARRIERS, SUPPLY & WASTE & VENT PIPING, STEAM, HEATING HOT WATER, HVAC SUPPLY, RETURN & EXHAUST AS NOTED. CAP AT NEAREST ACTIVE MAIN. SUPPLY & RETURN MAINS TO BE VALVED & CAPPED.

(C) IN REMODELED/ALTERED AREAS ANY PIPING OR DUCTWORK PASSING THROUGH THE REMODELED AREAS TO SERVE (OR BEING SERVED FROM EXISTING ADJACENT, REMOTE, OR SURROUNDING AREA THAT ARE TO REMAIN) SHALL BE RETAINED AND KEPT OPERATIONAL AND SHALL BE REROUTED IN ALL CASES WHERE THEY INTERFERE WITH ANY NEW WORK OR USAGE TO BE ACCOMPLISHED IN THE REMODELED AREA.

(D) PENETRATIONS THROUGH EXISTING WALLS AND FLOORS FORMERLY OCCUPIED BY REMOVED PIPING SHALL BE PATCHED TO MATCH EXISTING CONSTRUCTION.

16.) THIS CONTRACTOR SHALL REFER TO ARCHITECTURAL DRAWINGS TO FAMILIARIZE HIMSELF WITH EXTENT OF ALTERATION/REMODELING WORK AND MORE SPECIFICALLY NOTE WHERE NEW PARTITIONING IS BEING INSTALLED, WHERE EXISTING PARTITIONING IS BEING REMOVED, WHERE CEILINGS ARE BEING REMOVED AND OR REPLACED, ETC.

17.) THESE DRAWINGS ARE NECESSARILY DIAGRAMMATIC IN MATURE. NOT ALL FITTINGS, OFFSETS, VENTS, OR DRAINS ARE SHOWN. THE CONTRACTOR SHALL VISIT THE SITE PRIOR TO BIDDING AND INCLUDE ALL FITTINGS, OFFSETS, VENTS, AND DRAINS AS REQUIRED TO PROVIDE A COMPLETE AND FUNCTIONING SYSTEM.

18.) ALL EQUIPMENT VENTS AND FLUES SHALL BE FURNISHED AND INSTALLED BY THE MECHANICAL CONTRACTOR PER THE EQUIPMENT MANUFACTURERS RECOMMENDATIONS AND EQUIPMENT SPECIFICATIONS. PENETRATIONS THROUGH THE ROOF SHALL BE HELD A MINIMUM OF 10'-0" FROM HVAC EQUIPMENT FRESH AIR INLETS AND 2'-0" FROM PARAPETS.

1 / M101A FIRST FLOOR PLAN AREA 'A' – HVAC DEMOLITION

SCALE: 1/8" = 1'-0"

12"0 1' 5' 10' 20'

DEMOLITION NOTES:

1. REMOVE THE SUPPLY AND RETURN DUCT MAINS COMPLETE UP TO THE ROOF TOP UNIT. REMOVE ALL OTHER ASSOCIATED DUCTWORK AS SHOWN CROSSHATCHED COMPLETE WITH ALL HANGERS AND SUPPORTS. FIELD VERIFY EXACT LOCATION AND SIZE OF DUCTWORK AND ROOF TOP UNITS.
2. EXISTING HOT WATER CEILING RADIANT CEILING PANELS TO REMAIN. REMOVE THE EXISTING PIPING CONNECTIONS AND CONTROLS COMPLETE. REFER TO NEW WORK PIPING PLAN FOR RECONNECTION OF PIPING TO THE PANELS.
3. REMOVE THE EXISTING HOT WATER BOILER AND PUMP (SERVES RADIANT CEILING PANELS) COMPLETE WITH ALL ASSOCIATED PIPING, VENTS, CONTROLS, ETC. THE RADIANT PANELS TO REMAIN AND BE REUSED.
4. REMOVE THE EXISTING VARIABLE AIR VOLUME BOX COMPLETE WITH ALL ASSOCIATED DUCTWORK AND CONTROLS.
5. EXISTING CONTROLS (PNEUMATIC) FOR BUILDING ARE MOUNTED ON WALL IN THIS AREA. REMOVE ALL EXISTING CONTROLS COMPLETELY WITH ALL ASSOCIATED TUBING, CONDUIT AND WIRING.
6. EXISTING EXHAUST DUCTWORK / GRILLES / FAN TO REMAIN. VACUUM CLEAN INSIDE THE DUCTWORK AND CLEAN THE GRILLES. BALANCE SYSTEM AS SHOWN ON NEW WORK PLAN.
7. REMOVE THE EXISTING CABINET UNIT HEATER COMPLETE WITH ALL ASSOCIATED CONTROLS, PIPING, DUCTWORK, SUPPORT, ETC.
8. REMOVE THE EXHAUST FAN ON ROOF AND ALL THE ASSOCIATED DUCTWORK AND CONTROLS.
9. REMOVE ELECTRIC HEATER.
10. DATA ROOM SERVED BY LIEBERT UNIT. UNIT TO REMAIN.
11. REMOVE THE EXISTING GAS PIPING BACK TO MAIN WITH ALL SUPPORTS. CAP PIIPING AT MAIN. G.C. TO PATCH ROOF WHERE PIPING IS REMOVED.

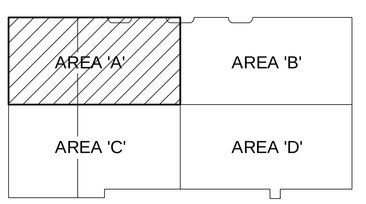

STRANG

ARCHITECTURE
ENGINEERING
INTERIOR DESIGN

STRANG INC.
6411 MINERAL POINT ROAD
MADISON, WI 53705-4995

T/ 608 276 9200
F/ 608 276 9204

Henneman Engineering Inc.
Madison:
1232 Fourier Drive, Suite 101
Madison, Wisconsin 53717-1960
T 608.833.7000 F 608.833.6996
Email: info@henneman.com
Website: http://www.henneman.com
© 2005 Henneman Engineering Inc. / IL reg. #184-000245
(501-013725) (062-026272)
JOB NO. 07-5780

ISSUED FOR:
CONSTRUCTION
INTERIOR REMODEL
01-29-09

DRAWING SET	CD
COPYRIGHT STRANG, INC.	2009
FILE NAME	M101
REVISIONS	
DRAWN	KSO
CHECKED	CCL
DATE	01-29-09
PROJECT NO.	2007070

PROJECT TITLE

DANE COUNTY
JOB CENTER
INTERIOR REMODEL
BID #109001

1819 ABERG AVENUE
MADISON, WISCONSIN

SHEET TITLE

First Floor Plan
Area A - HVAC
Demolition

SHEET NO.

M101A

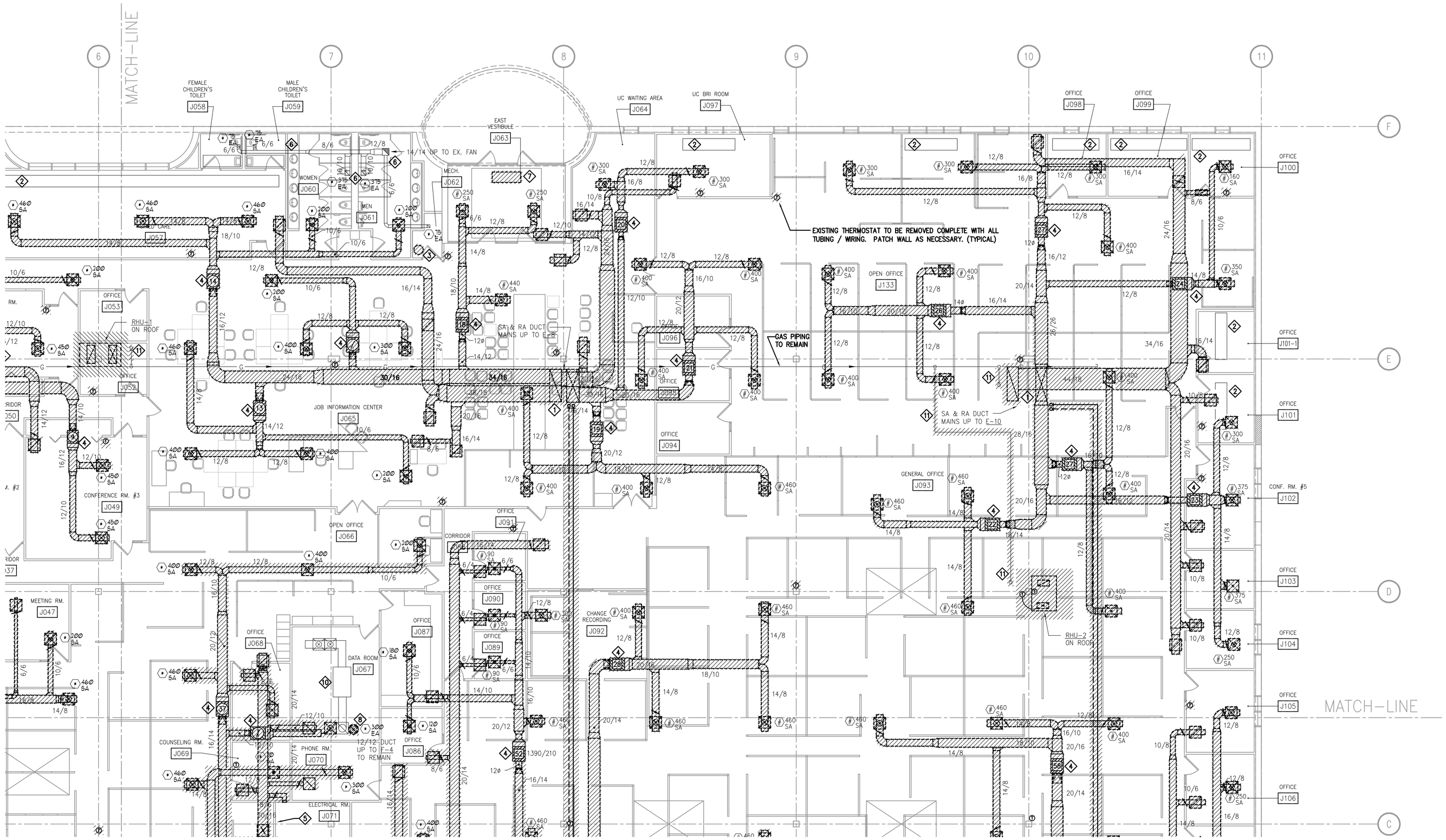

1 M101B FIRST FLOOR PLAN AREA 'B – HVAC DEMOLITION

SCALE: 1/8" = 1'-0"

12" 0 1' 5' 10' 20'

DEMOLITION NOTES:

1. REMOVE THE SUPPLY AND RETURN DUCT MAINS COMPLETE UP TO THE ROOF TOP UNIT. REMOVE ALL OTHER ASSOCIATED DUCTWORK AS SHOWN CROSSHATCHED COMPLETE WITH ALL HANGERS AND SUPPORTS. FIELD VERIFY EXACT LOCATION AND SIZE OF DUCTWORK AND ROOF TOP UNITS.
2. EXISTING HOT WATER CEILING RADIANT CEILING PANELS TO REMAIN. REMOVE THE EXISTING PIPING CONNECTIONS AND CONTROLS COMPLETE. REFER TO NEW WORK PIPING PLAN FOR RECONNECTION OF PIPING TO THE PANELS.
3. REMOVE THE EXISTING HOT WATER BOILER AND PUMP (SERVES RADIANT CEILING PANELS) COMPLETE WITH ALL ASSOCIATED PIPING, VENTS, CONTROLS, ETC. THE RADIANT PANELS TO REMAIN AND BE REUSED.
4. REMOVE THE EXISTING VARIABLE AIR VOLUME BOX COMPLETE WITH ALL ASSOCIATED DUCTWORK AND CONTROLS.
5. EXISTING CONTROLS (PNEUMATIC) FOR BUILDING ARE MOUNTED ON WALL IN THIS AREA. REMOVE ALL EXISTING CONTROLS COMPLETELY WITH ALL ASSOCIATED TUBING, CONDUIT AND WIRING.
6. EXISTING EXHAUST DUCTWORK / GRILLES / FAN TO REMAIN. VACUUM CLEAN INSIDE THE DUCTWORK AND CLEAN THE GRILLES. BALANCE SYSTEM AS SHOWN ON NEW WORK PLAN.
7. REMOVE THE EXISTING CABINET UNIT HEATER COMPLETE WITH ALL ASSOCIATED CONTROLS, PIPING, DUCTWORK, SUPPORT, ETC.
8. REMOVE THE EXHAUST FAN ON ROOF AND ALL THE ASSOCIATED DUCTWORK AND CONTROLS.
9. REMOVE ELECTRIC HEATER.
10. DATA ROOM SERVED BY LIEBERT UNIT. UNIT TO REMAIN.
11. REMOVE THE EXISTING GAS PIPING BACK TO MAIN WITH ALL SUPPORTS. CAP PIIPING AT MAIN. G.C. TO PATCH ROOF WHERE PIPING IS REMOVED.

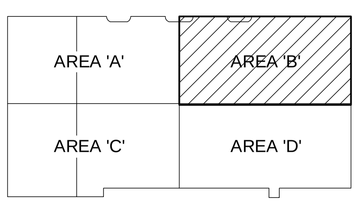

N

KEY PLAN

STRANG

ARCHITECTURE
ENGINEERING
INTERIOR DESIGN

STRANG INC.
6411 MINERAL POINT ROAD
MADISON, WI 53705-4395

T/ 608 276 9200
F/ 608 276 9204

Henneman Engineering Inc.
Madison:
1232 Fourier Drive, Suite 101
Madison, Wisconsin 53717-1960
T 608.833.7000 F 608.833.6996
Email: info@henneman.com
Website: http://www.henneman.com
© 2005 Henneman Engineering Inc. / E. reg. #1984-000245 (001-013372) (062-026272)
JOB NO. 07-5780

ISSUED FOR:
CONSTRUCTION
INTERIOR REMODEL
01-29-09

DRAWING SET	CD
COPYRIGHT STRANG, INC.	2009
FILE NAME	M101
REVISIONS	
DRAWN	KSO
CHECKED	CCL
DATE	01-29-09
PROJECT NO.	2007070

PROJECT TITLE

DANE COUNTY
JOB CENTER
INTERIOR REMODEL
BID #109001

1819 ABERG AVENUE
MADISON, WISCONSIN

SHEET TITLE

First Floor Plan
Area B - HVAC
Demolition

SHEET NO.

M101B

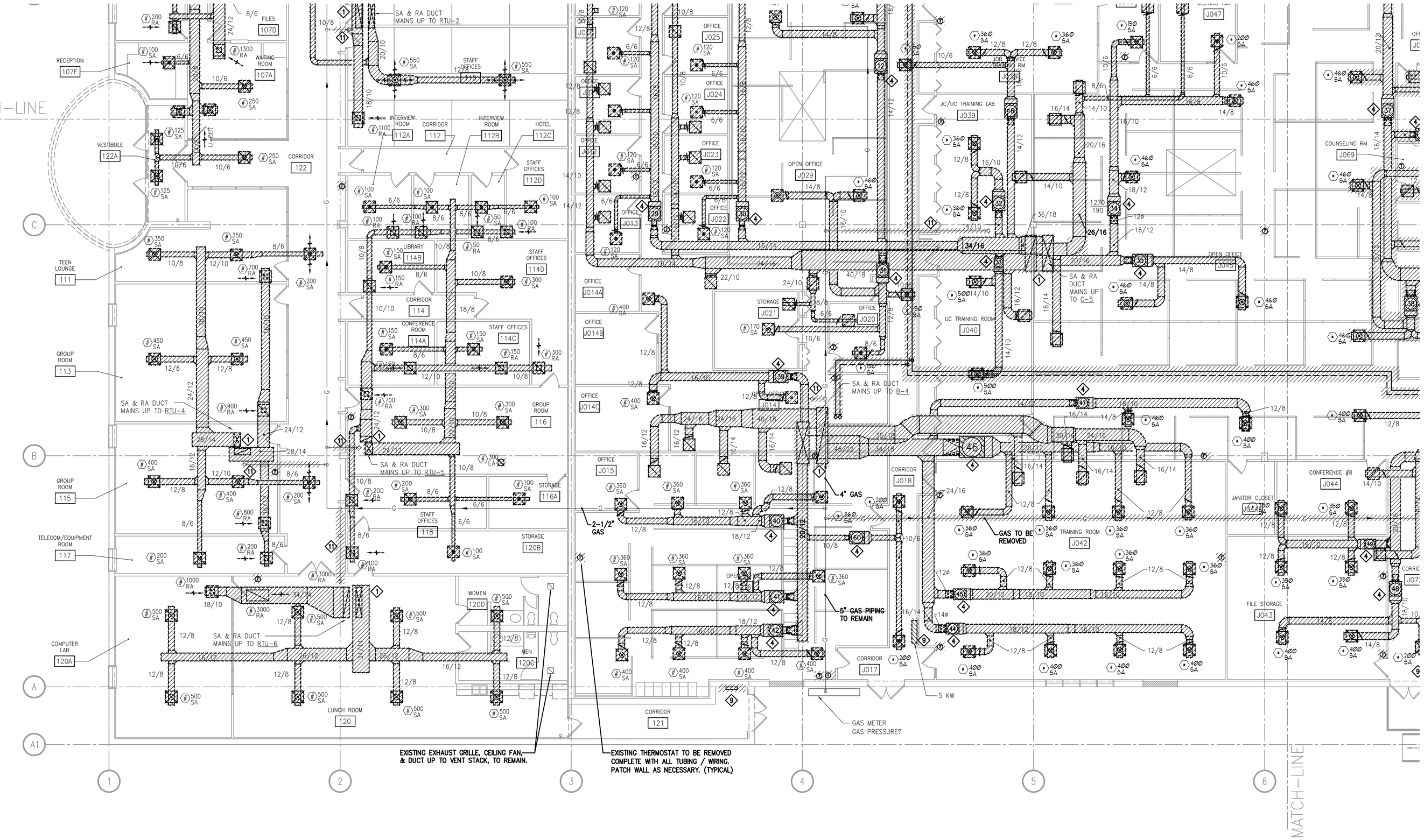

1 / M101C FIRST FLOOR PLAN AREA 'C' – HVAC DEMOLITION

SCALE: 1/8" = 1'–0"

12"0 1' 5' 10' 20'

DEMOLITION NOTES:

1. REMOVE THE SUPPLY AND RETURN DUCT MAINS COMPLETE UP TO THE ROOF TOP UNIT. REMOVE ALL OTHER ASSOCIATED DUCTWORK AS SHOWN CROSSHATCHED COMPLETE WITH ALL HANGERS AND SUPPORTS. FIELD VERIFY EXACT LOCATION AND SIZE OF DUCTWORK AND ROOF TOP UNITS.
2. EXISTING HOT WATER CEILING RADIANT CEILING PANELS TO REMAIN. REMOVE THE EXISTING PIPING CONNECTIONS AND CONTROLS COMPLETE. REFER TO NEW WORK PIPING PLAN FOR RECONNECTION OF PIPING TO THE PANELS.
3. REMOVE THE EXISTING HOT WATER BOILER AND PUMP (SERVES RADIANT CEILING PANELS) COMPLETE WITH ALL ASSOCIATED PIPING, VENTS, CONTROLS, ETC. THE RADIANT PANELS TO REMAIN AND BE REUSED.
4. REMOVE THE EXISTING VARIABLE AIR VOLUME BOX COMPLETE WITH ALL ASSOCIATED DUCTWORK AND CONTROLS.
5. EXISTING CONTROLS (PNEUMATIC) FOR BUILDING ARE MOUNTED ON WALL IN THIS AREA. REMOVE ALL EXISTING CONTROLS COMPLETELY WITH ALL ASSOCIATED TUBING, CONDUIT AND WIRING.
6. EXISTING EXHAUST DUCTWORK / GRILLES / FAN TO REMAIN. VACUUM CLEAN INSIDE THE DUCTWORK AND CLEAN THE GRILLES. BALANCE SYSTEM AS SHOWN ON NEW WORK PLAN.
7. REMOVE THE EXISTING CABINET UNIT HEATER COMPLETE WITH ALL ASSOCIATED CONTROLS, PIPING, DUCTWORK, SUPPORT, ETC.
8. REMOVE THE EXHAUST FAN ON ROOF AND ALL THE ASSOCIATED DUCTWORK AND CONTROLS.
9. REMOVE ELECTRIC HEATER.
10. DATA ROOM SERVED BY LIEBERT UNIT. UNIT TO REMAIN.
11. REMOVE THE EXISTING GAS PIPING BACK TO MAIN WITH ALL SUPPORTS. CAP PIIPING AT MAIN. G.C. TO PATCH ROOF WHERE PIPING IS REMOVED.

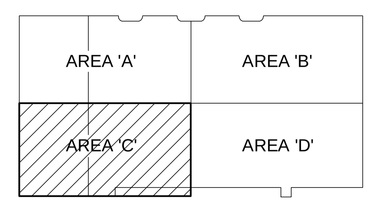

STRANG

ARCHITECTURE
ENGINEERING
INTERIOR DESIGN

STRANG INC.
6411 MINERAL POINT ROAD
MADISON, WI 53705–4395

T/ 608 276 9200
F/ 608 276 9204

Henneman Engineering Inc.
Madison:
1232 Fourier Drive, Suite 101
Madison, Wisconsin 53717-1960
T 608.833.7000 F 608.833.6996
Email: info@henneman.com
Website: http://www.henneman.com
© 2009 Henneman Engineering Inc. / S. reg. #184-000246
(001-013373) (063-026272)
JOB NO. 07-5780

ISSUED FOR:
CONSTRUCTION
INTERIOR REMODEL
01-29-09

DRAWING SET	CD
COPYRIGHT STRANG, INC.	2009
FILE NAME	M101
REVISIONS	
DRAWN	KSO
CHECKED	CCL
DATE	01-29-09
PROJECT NO.	2007070

PROJECT TITLE

DANE COUNTY
JOB CENTER
INTERIOR REMODEL
BID #109001

1819 ABERG AVENUE
MADISON, WISCONSIN

SHEET TITLE

First Floor Plan
Area C - HVAC
Demolition

SHEET NO.

M101C

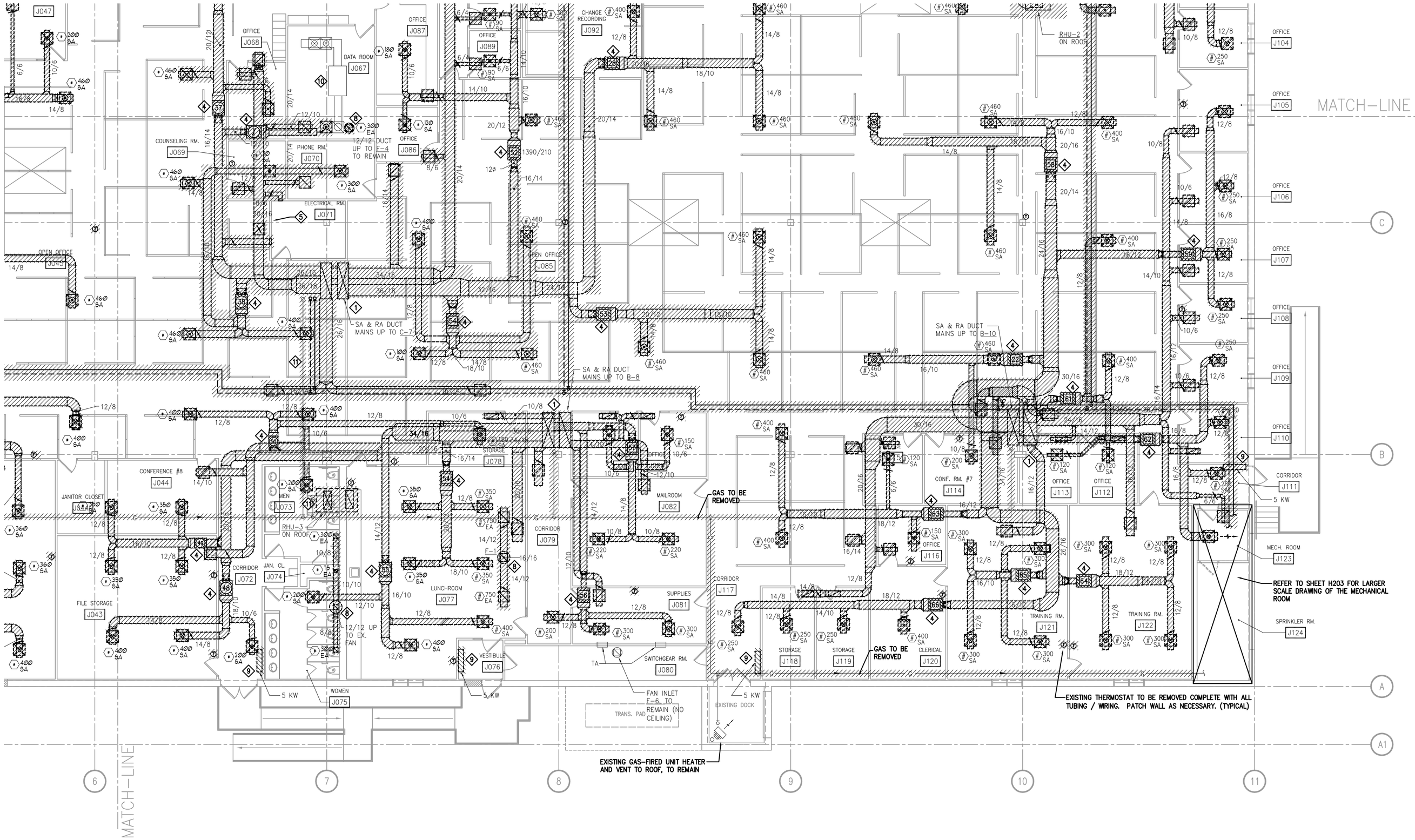

1 M101D FIRST FLOOR PLAN AREA 'D' – HVAC DEMOLITION

SCALE: 1/8" = 1'-0"

12"0 1' 5' 10' 20'

DEMOLITION NOTES:

1. REMOVE THE SUPPLY AND RETURN DUCT MAINS COMPLETE UP TO THE ROOF TOP UNIT. REMOVE ALL OTHER ASSOCIATED DUCTWORK AS SHOWN CROSSHATCHED COMPLETE WITH ALL HANGERS AND SUPPORTS. FIELD VERIFY EXACT LOCATION AND SIZE OF DUCTWORK AND ROOF TOP UNITS.
2. EXISTING HOT WATER CEILING RADIANT CEILING PANELS TO REMAIN. REMOVE THE EXISTING PIPING CONNECTIONS AND CONTROLS COMPLETE. REFER TO NEW WORK PIPING PLAN FOR RECONNECTION OF PIPING TO THE PANELS.
3. REMOVE THE EXISTING HOT WATER BOILER AND PUMP (SERVES RADIANT CEILING PANELS) COMPLETE WITH ALL ASSOCIATED PIPING, VENTS, CONTROLS, ETC. THE RADIANT PANELS TO REMAIN AND BE REUSED.
4. REMOVE THE EXISTING VARIABLE AIR VOLUME BOX COMPLETE WITH ALL ASSOCIATED DUCTWORK AND CONTROLS.
5. EXISTING CONTROLS (PNEUMATIC) FOR BUILDING ARE MOUNTED ON WALL IN THIS AREA. REMOVE ALL EXISTING CONTROLS COMPLETELY WITH ALL ASSOCIATED TUBING, CONDUIT AND WIRING.
6. EXISTING EXHAUST DUCTWORK / GRILLES / FAN TO REMAIN. VACUUM CLEAN INSIDE THE DUCTWORK AND CLEAN THE GRILLES. BALANCE SYSTEM AS SHOWN ON NEW WORK PLAN.
7. REMOVE THE EXISTING CABINET UNIT HEATER COMPLETE WITH ALL ASSOCIATED CONTROLS, PIPING, DUCTWORK, SUPPORT, ETC.
8. REMOVE THE EXHAUST FAN ON ROOF AND ALL THE ASSOCIATED DUCTWORK AND CONTROLS.
9. REMOVE ELECTRIC HEATER.
10. DATA ROOM SERVED BY LIEBERT UNIT. UNIT TO REMAIN.
11. REMOVE THE EXISTING GAS PIPING BACK TO MAIN WITH ALL SUPPORTS. CAP PIPING AT MAIN. G.C. TO PATCH ROOF WHERE PIPING IS REMOVED.

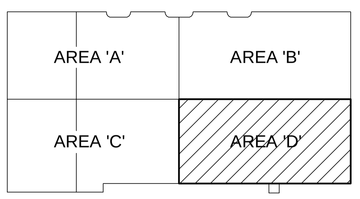

KEY PLAN

STRANG

ARCHITECTURE
ENGINEERING
INTERIOR DESIGN

STRANG INC.
6411 MINERAL POINT ROAD
MADISON, WI 53705-4395

T/ 608 276 9200
F/ 608 276 9204

Henneman Engineering Inc.
Madison:
1232 Fourier Drive, Suite 101
Madison, Wisconsin 53717-1960
T 608.833.7000 F 608.833.6996
Email: info@henneman.com
Website: http://www.henneman.com
© 2009 Henneman Engineering Inc. / S. reg. #184-000245
(001-013373) (063-026372)

JOB NO. 07-5780

ISSUED FOR:
CONSTRUCTION
INTERIOR REMODEL
01-29-09

DRAWING SET	CD
COPYRIGHT STRANG, INC.	2009
FILE NAME	M101
REVISIONS	
DRAWN	KSO
CHECKED	CCL
DATE	01-29-09
PROJECT NO.	2007070

PROJECT TITLE

DANE COUNTY
JOB CENTER
INTERIOR REMODEL
BID #109001

1819 ABERG AVENUE
MADISON, WISCONSIN

SHEET TITLE

First Floor Plan
Area D - HVAC
Demolition

SHEET NO.

M101D

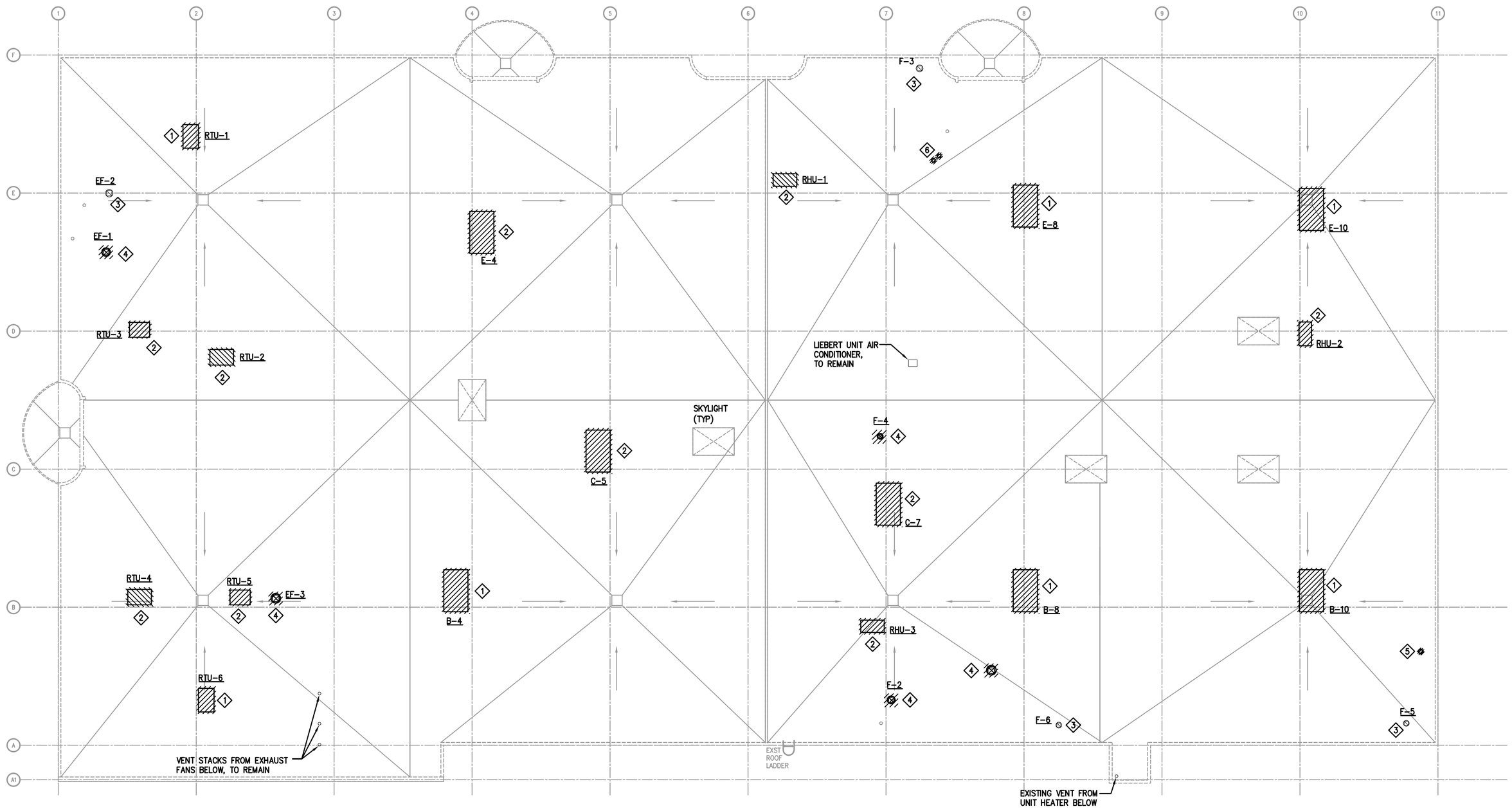

1 M102 ROOF PLAN – HVAC DEMOLITION

SCALE: 1/16" = 1'-0"

24" 0 2' 8' 16' 32'

CONTRACTOR IS RESPONSIBLE FOR VERIFYING EXACT LOCATIONS AND SIZES OF ALL EQUIPMENT, VENTS, FANS, ETC.

ALL EQUIPMENT TAGS ON THIS SHEET RELATE TO THE EXISTING EQUIPMENT TAGS AND ARE NOT RELATED TO THE NEW EQUIPMENT LISTED IN THE EQUIPMENT SCHEDULES.

DEMOLITION NOTES:

1. REMOVE THE EXISTING ROOFTOP UNIT COMPLETE WITH ALL ASSOCIATED DUCTWORK, PIPING, CURBS, SUPPORTS, ETC... EXISTING OPENING IN ROOF TO BE USED FOR NEW ROOFTOP UNIT. MODIFY OPENING AS NECESSARY TO ACCOMMODATE NEW ROOFTOP UNIT. G.C. TO PATCH ROOF ONCE UNIT IS IN PLACE.
2. REMOVE THE EXISTING ROOFTOP UNIT COMPLETE WITH ALL ASSOCIATED DUCTWORK, PIPING, CURBS, SUPPORTS, ETC... EXISTING OPENINGS IN ROOF TO BE PATCHED AND SEALED BY THE G.C.
3. EXISTING EXHAUST FAN ON ROOF TO REMAIN. BALANCE FAN TO THE AIR QUANTITY INDICATED ON THE NEW WORK PLAN. PROVIDE NEW BELTS OR SHEAVE AS NECESSARY TO BALANCE FAN TO THE CFM INDICATED. CONSULT A/E IF INDICATED CFM CANNOT BE ACHIEVED.
4. REMOVE THE EXISTING EXHAUST FAN COMPLETE WITH ALL THE ASSOCIATED DUCTWORK, CURBS, SUPPORT, CONTROLS, ETC.. G.C. TO PATCH ROOF AS NECESSARY. REFER TO NEW WORK PLAN FOR ROOF PENETRATIONS TO BE REUSED.
5. REMOVE THE EXISTING BOILER VENT STACK THROUGH ROOF. REUSE OPENING FOR NEW BOILER VENT STACK. MODIFY HOLE AS NECESSARY FOR NEW STACK DIMENSIONS.
6. REMOVE THE EXISTING BOILER COMBUSTION AIR AND VENT PIPE THROUGH ROOF COMPLETE. G.C. TO PATCH ROOF WATERTIGHT.

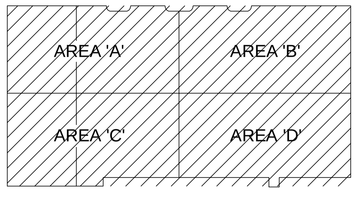

N KEY PLAN

STRANG

ARCHITECTURE
ENGINEERING
INTERIOR DESIGN

STRANG INC.
6411 MINERAL POINT ROAD
MADISON, WI 53705-4395

T/ 608 276 9200
F/ 608 276 9204

Henneman Engineering Inc.
Madison:
1232 Fourier Drive, Suite 101
Madison, Wisconsin 53717-1960
T 608.833.7000 F 608.833.6996
Email: info@henneman.com
Website: http://www.henneman.com
© 2009 Henneman Engineering Inc. / S. reg. #184-000245
JOB NO. 07-5780

ISSUED FOR:
CONSTRUCTION
INTERIOR REMODEL
01-29-09

DRAWING SET	CD
COPYRIGHT STRANG, INC.	2009
FILE NAME	M102
REVISIONS	
DRAWN	KSO
CHECKED	CCL
DATE	01-29-09
PROJECT NO.	2007070

PROJECT TITLE

DANE COUNTY
JOB CENTER
INTERIOR REMODEL
BID #109001

1819 ABERG AVENUE
MADISON, WISCONSIN

SHEET TITLE

Roof Plan
HVAC
Demolition

SHEET NO.
M102

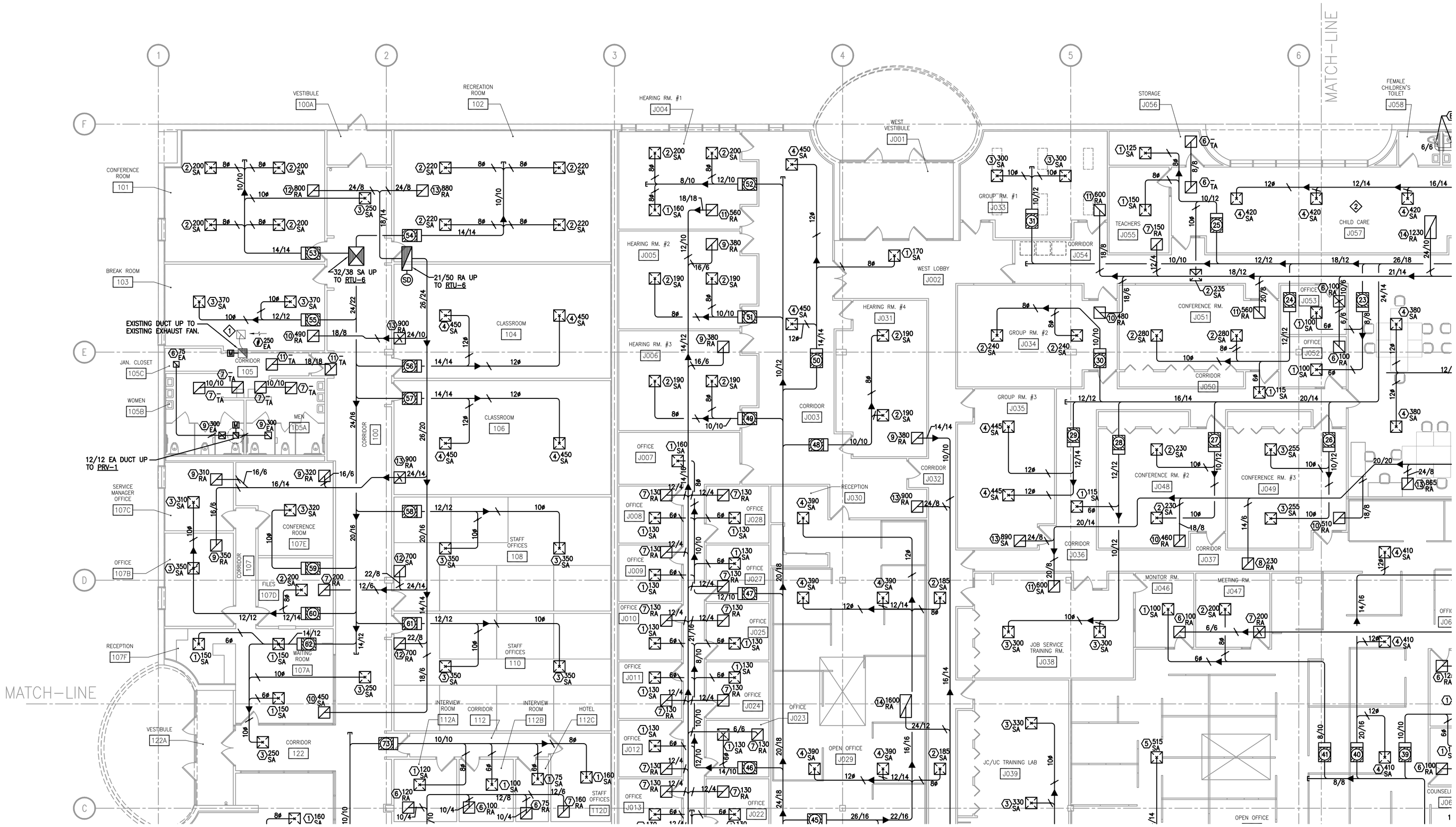

1 / M201A — FIRST FLOOR PLAN – AREA 'A'

SCALE: 1/8" = 1'-0"

12"0 1' 5' 10' 20'

SPRINKLER CONTRACTOR
PHASING REQUIRED. SPRINKLER CONTRACTOR SHALL REMOVE ALL SPRINKLER HEAD ESCUTCHEONS AS REQUIRED FOR REMOVAL OF CEILING TILES. IF SPRINKLER HEAD MUST BE REMOVED, SPRINKLER CONTRACTOR SHALL SHUT DOWN AND DRAIN SPRINKLER SYSTEM FOR HEAD REMOVAL. WHEN ALL TILES HAVE BEEN REMOVED, SPRINKLER CONTRACTOR SHALL REINSTALL ALL SPRINKLER HEADS AND RECHARGE SYSTEM PIPING FOR AN OPERABLE SYSTEM DURING THE CONSTRUCTION. CONTRACTOR SHALL AGAIN REPEAT THE ABOVE WHEN CEILING TILES ARE REINSTALLED AT END OF CONSTRUCTION PHASE.

PHASING NOTE:
PHASING REQUIRED. PROVIDE TEMPORARY DUCT CONNECTIONS TO MAINTAIN AIRFLOW IN AREAS THAT ARE TO REMAIN OCCUPIED AND UNTIL SUCH TIME AS NEW UNIT IS SET IN PLACE.

NEW WORK NOTES:

1. EXISTING EXHAUST DUCTWORK / GRILLES / FAN TO REMAIN. VACUUM CLEAN INSIDE THE DUCTWORK AND CLEAN THE GRILLES. REBALANCE EXISTING CFM PER GRILLE TAGS SHOWN, CONTACT A/E IF AIRFLOW CANNOT BE ACHIEVED. INSTALL NEW MOTORIZED DAMPER.
2. WORK IN THIS AREA TO BE PERFORMED DURING NIGHTS AND WEEKENDS, COORDINATE EXACT LOACTIONS WITH OWNER.
3. EXISTING LIEBERT UNIT & ASSOCIATED DUCTWORK, DIFFUSERS, TO REMAIN
4. INSTALL BOOSTER COIL DOWNSTREAM OF VAV BOX. TRANSITION TO DUCT SIZE REQUIRED FOR COIL AS SCHEDULED.

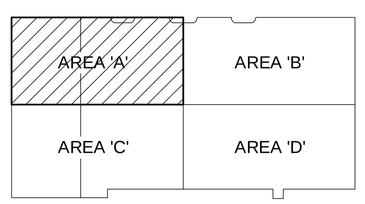

STRANG

ARCHITECTURE
ENGINEERING
INTERIOR DESIGN

STRANG INC.
6411 MINERAL POINT ROAD
MADISON, WI 53705-4995

T/ 608 276 9200
F/ 608 276 9204

Henneman Engineering Inc.
Madison:
1232 Fourier Drive, Suite 101
Madison, Wisconsin 53717-1960
T 608.833.7000 F 608.833.6996
Email: info@henneman.com
Website: http://www.henneman.com

© 2005 Henneman Engineering Inc. / E. reg. #184-000245
(501-013372) (062-029272)
JOB NO. 07-5780

ISSUED FOR:
CONSTRUCTION
INTERIOR REMODEL
01-29-09

DRAWING SET	CD
COPYRIGHT STRANG, INC.	2009
FILE NAME	M201
REVISIONS	
DRAWN	KSO
CHECKED	CCL
DATE	01-29-09
PROJECT NO.	2007070

PROJECT TITLE

DANE COUNTY
JOB CENTER
INTERIOR REMODEL
BID #109001

1819 ABERG AVENUE
MADISON, WISCONSIN

SHEET TITLE

First Floor Plan
Area A - HVAC
New Work - Ductwork

SHEET NO.

M201A

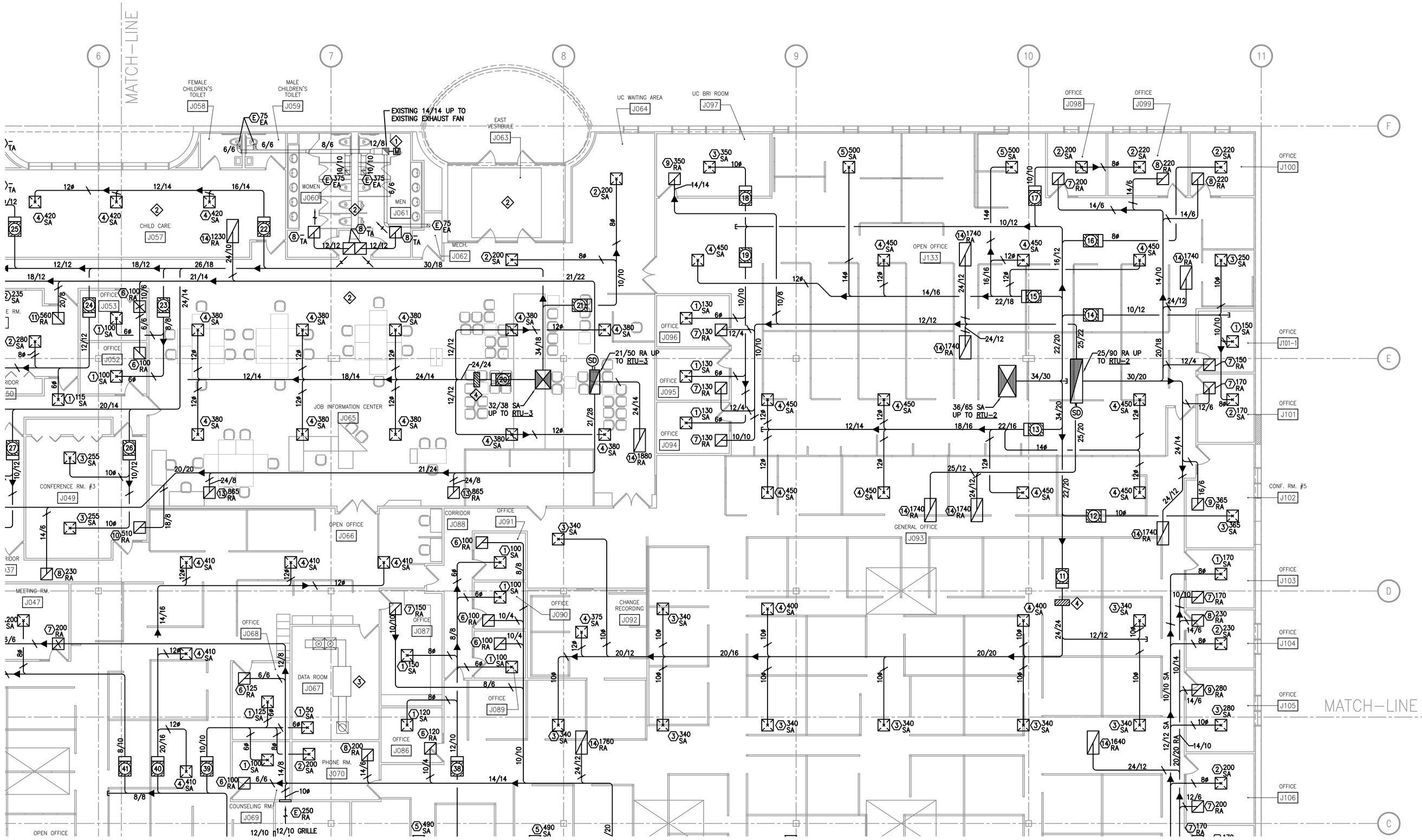

1 M201B FIRST FLOOR PLAN – AREA 'B'

SCALE: 1/8" = 1'-0"

12" 0 1' 5' 10' 20'

PHASING NOTE:
PHASING REQUIRED. PROVIDE TEMPORARY DUCT CONNECTIONS TO MAINTAIN AIRFLOW IN AREAS THAT ARE TO REMAIN OCCUPIED AND UNTIL SUCH TIME AS NEW UNIT IS SET IN PLACE.

SPRINKLER CONTRACTOR
PHASING REQUIRED. SPRINKLER CONTRACTOR SHALL REMOVE ALL SPRINKLER HEAD ESCUTCHEONS AS REQUIRED FOR REMOVAL OF CEILING TILES. IF SPRINKLER HEAD MUST BE REMOVED, SPRINKLER CONTRACTOR SHALL SHUT DOWN AND DRAIN SPRINKLER SYSTEM FOR HEAD REMOVAL, WHEN ALL TILES HAVE BEEN REMOVED, SPRINKLER CONTRACTOR SHALL REINSTALL ALL SPRINKLER HEADS AND RECHARGE SYSTEM PIPING FOR AN OPERABLE SYSTEM DURING THE CONSTRUCTION. CONTRACTOR SHALL AGAIN REPEAT THE ABOVE WHEN CEILING TILES ARE REINSTALLED AT END OF CONSTRUCTION PHASE.

NEW WORK NOTES:

1. EXISTING EXHAUST DUCTWORK / GRILLES / FAN TO REMAIN. VACUUM CLEAN INSIDE THE DUCTWORK AND CLEAN THE GRILLES. REBALANCE EXISTING CFM PER GRILLE TAGS SHOWN, CONTACT A/E IF AIRFLOW CANNOT BE ACHIEVED. INSTALL NEW MOTORIZED DAMPER.
2. WORK IN THIS AREA TO BE PERFORMED DURING NIGHTS AND WEEKENDS, COORDINATE EXACT LOACTIONS WITH OWNER.
3. EXISTING LIEBERT UNIT & ASSOCIATED DUCTWORK, DIFFUSERS, TO REMAIN
4. INSTALL BOOSTER COIL DOWNSTREAM OF VAV BOX. TRANSITION TO DUCT SIZE REQUIRED FOR COIL AS SCHEDULED.

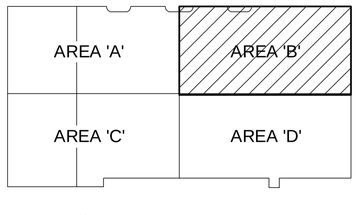

N

KEY PLAN

STRANG

ARCHITECTURE
ENGINEERING
INTERIOR DESIGN

STRANG INC.
6411 MINERAL POINT ROAD
MADISON, WI 53705-4395

T/ 608 276 9200
F/ 608 276 9204

Henneman Engineering Inc.
Madison:
1232 Fourier Drive, Suite 101
Madison, Wisconsin 53717-1960
T 608.833.7000 F 608.833.6996
Email: info@henneman.com
Website: http://www.henneman.com
© 2005 Henneman Engineering Inc. / E. reg. #184-000245
(501-013372) (562-026272)
JOB NO. 07-5780

ISSUED FOR:
CONSTRUCTION
INTERIOR REMODEL
01-29-09

DRAWING SET	CD
COPYRIGHT STRANG, INC.	2009
FILE NAME	M201
REVISIONS	
DRAWN	KSO
CHECKED	CCL
DATE	01-29-09
PROJECT NO.	2007070

PROJECT TITLE

DANE COUNTY
JOB CENTER
INTERIOR REMODEL
BID #109001

1819 ABERG AVENUE
MADISON, WISCONSIN

SHEET TITLE

First Floor Plan
Area B - HVAC
New Work - Ductwork

SHEET NO.

M201B

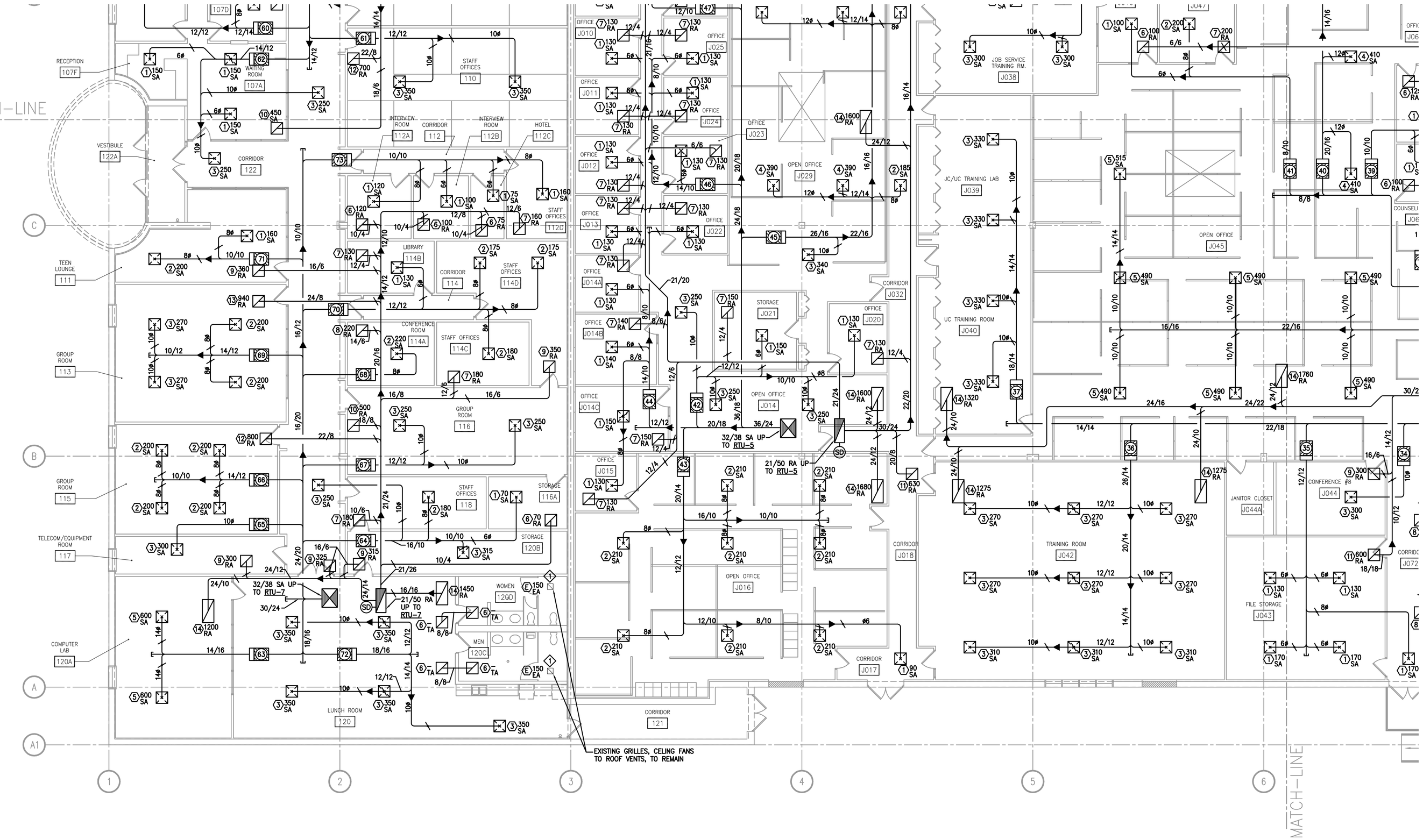

1 M201C FIRST FLOOR PLAN – AREA 'C'

SCALE: 1/8" = 1'-0"

12" 0 1' 5' 10' 20'

PHASING NOTE:
PHASING REQUIRED. PROVIDE TEMPORARY DUCT CONNECTIONS TO MAINTAIN AIRFLOW IN AREAS THAT ARE TO REMAIN OCCUPIED AND UNTIL SUCH TIME AS NEW UNIT IS SET IN PLACE.

SPRINKLER CONTRACTOR
PHASING REQUIRED. SPRINKLER CONTRACTOR SHALL REMOVE ALL SPRINKLER HEAD ESCUTCHEONS AS REQUIRED FOR REMOVAL OF CEILING TILES. IF SPRINKLER HEAD MUST BE REMOVED, SPRINKLER CONTRACTOR SHALL SHUT DOWN AND DRAIN SPRINKLER SYSTEM FOR HEAD REMOVAL, WHEN ALL TILES HAVE BEEN REMOVED, SPRINKLER CONTRACTOR SHALL REINSTALL ALL SPRINKLER HEADS AND RECHARGE SYSTEM PIPING FOR AN OPERABLE SYSTEM DURING THE CONSTRUCTION. CONTRACTOR SHALL AGAIN REPEAT THE ABOVE WHEN CEILING TILES ARE REINSTALLED AT END OF CONSTRUCTION PHASE.

NEW WORK NOTES:

1. EXISTING EXHAUST DUCTWORK / GRILLES / FAN TO REMAIN. VACUUM CLEAN INSIDE THE DUCTWORK AND CLEAN THE GRILLES. REBALANCE EXISTING CFM PER GRILLE TAGS SHOWN, CONTACT A/E IF AIRFLOW CANNOT BE ACHIEVED. INSTALL NEW MOTORIZED DAMPER.
2. WORK IN THIS AREA TO BE PERFORMED DURING NIGHTS AND WEEKENDS, COORDINATE EXACT LOACTIONS WITH OWNER.
3. EXISTING LIEBERT UNIT & ASSOCIATED DUCTWORK, DIFFUSERS, TO REMAIN
4. INSTALL BOOSTER COIL DOWNSTREAM OF VAV BOX. TRANSITION TO DUCT SIZE REQUIRED FOR COIL AS SCHEDULED.

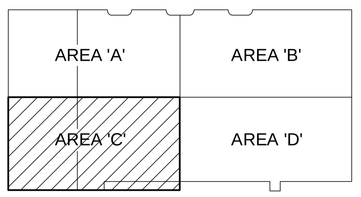

N

KEY PLAN

STRANG

ARCHITECTURE
ENGINEERING
INTERIOR DESIGN

STRANG INC.
6411 MINERAL POINT ROAD
MADISON, WI 53705-4395

T/ 608 276 9200
F/ 608 276 9204

Henneman Engineering Inc.
Madison:
1232 Fourier Drive, Suite 101
Madison, Wisconsin 53717-1960
T 608.833.7000 F 608.833.6996
Email: info@henneman.com
Website: http://www.henneman.com
© 2006 Henneman Engineering Inc. / IL reg. #184-000245
(201-013372) (262-026272)
JOB NO. 07-5780

ISSUED FOR:
CONSTRUCTION
INTERIOR REMODEL
01-29-09

DRAWING SET	CD
COPYRIGHT STRANG, INC.	2009
FILE NAME	M201
REVISIONS	
DRAWN	KSO
CHECKED	CCL
DATE	01-29-09
PROJECT NO.	2007070

PROJECT TITLE

DANE COUNTY
JOB CENTER
INTERIOR REMODEL
BID #109001

1819 ABERG AVENUE
MADISON, WISCONSIN

SHEET TITLE

First Floor Plan
Area C - HVAC
New Work - Ductwork

SHEET NO.

M201C

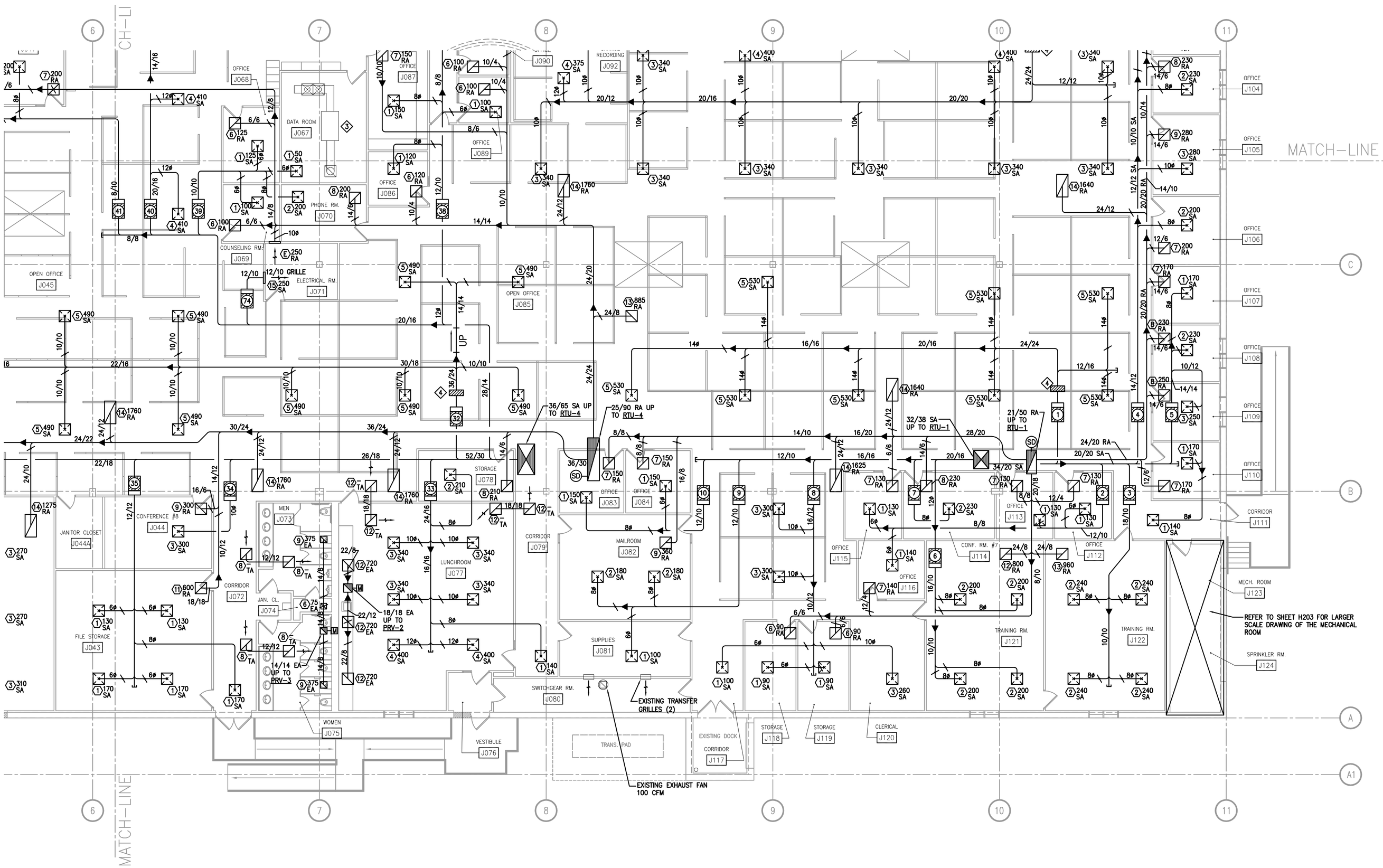

1 M201D FIRST FLOOR PLAN – AREA 'D'

SCALE: 1/8" = 1'-0"

12"0 1' 5' 10' 20'

SPRINKLER CONTRACTOR
PHASING REQUIRED. SPRINKLER CONTRACTOR SHALL REMOVE ALL SPRINKLER HEAD ESCUTCHEONS AS REQUIRED FOR REMOVAL OF CEILING TILES. IF SPRINKLER HEAD MUST BE REMOVED, SPRINKLER CONTRACTOR SHALL SHUT DOWN AND DRAIN SPRINKLER SYSTEM FOR HEAD REMOVAL. WHEN ALL TILES HAVE BEEN REMOVED, SPRINKLER CONTRACTOR SHALL REINSTALL ALL SPRINKLER HEADS AND RECHARGE SYSTEM PIPING FOR AN OPERABLE SYSTEM DURING THE CONSTRUCTION. CONTRACTOR SHALL AGAIN REPEAT THE ABOVE WHEN CEILING TILES ARE REINSTALLED AT END OF CONSTRUCTION PHASE.

PHASING NOTE:
PHASING REQUIRED. PROVIDE TEMPORARY DUCT CONNECTIONS TO MAINTAIN AIRFLOW IN AREAS THAT ARE TO REMAIN OCCUPIED AND UNTIL SUCH TIME AS NEW UNIT IS SET IN PLACE.

NEW WORK NOTES:

1. EXISTING EXHAUST DUCTWORK / GRILLES / FAN TO REMAIN. VACUUM CLEAN INSIDE THE DUCTWORK AND CLEAN THE GRILLES. REBALANCE EXISTING CFM PER GRILLE TAGS SHOWN, CONTACT A/E IF AIRFLOW CANNOT BE ACHIEVED. INSTALL NEW MOTORIZED DAMPER.
2. WORK IN THIS AREA TO BE PERFORMED DURING NIGHTS AND WEEKENDS, COORDINATE EXACT LOACTIONS WITH OWNER.
3. EXISTING LIEBERT UNIT & ASSOCIATED DUCTWORK, DIFFUSERS, TO REMAIN
4. INSTALL BOOSTER COIL DOWNSTREAM OF VAV BOX. TRANSITION TO DUCT SIZE REQUIRED FOR COIL AS SCHEDULED.

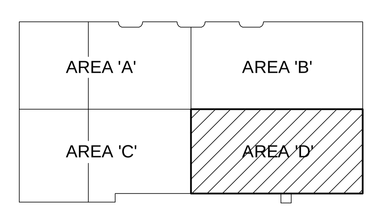

N KEY PLAN

STRANG

ARCHITECTURE
ENGINEERING
INTERIOR DESIGN

STRANG INC.
6411 MINERAL POINT ROAD
MADISON, WI 53705-4395

T/ 608 276 9200
F/ 608 276 9204

Henneman Engineering Inc.
Madison:
1232 Fourier Drive, Suite 101
Madison, Wisconsin 53717-1960
T 608.833.7000 F 608.833.6996
Email: info@henneman.com
Website: http://www.henneman.com
© 2009 Henneman Engineering Inc. / S. reg. #184-000245
(001-013373) (063-026372)
JOB NO. 07-5780

ISSUED FOR:
CONSTRUCTION
INTERIOR REMODEL
01-29-09

DRAWING SET	CD
COPYRIGHT STRANG, INC.	2009
FILE NAME	M201
REVISIONS	
DRAWN	KSO
CHECKED	CCL
DATE	01-29-09
PROJECT NO.	2007070

PROJECT TITLE

DANE COUNTY
JOB CENTER
INTERIOR REMODEL
BID #109001

1819 ABERG AVENUE
MADISON, WISCONSIN

SHEET TITLE

First Floor Plan
Area D - HVAC
New Work - Ductwork

SHEET NO.
M201D

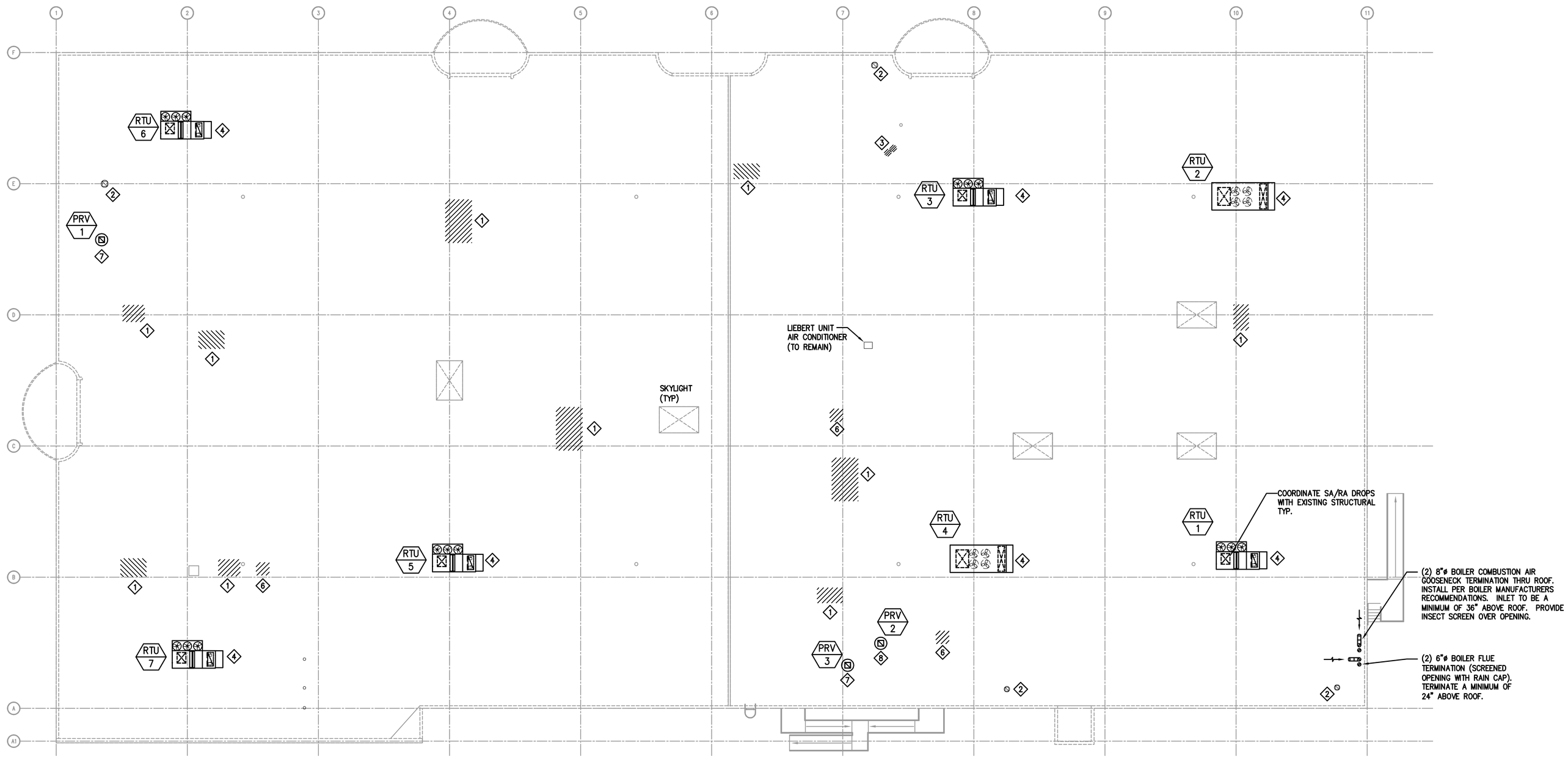

1 M202 ROOF PLAN – NEW WORK

SCALE: 1/16" = 1'-0"

24" 0 2' 8' 16' 32'

GENERAL NOTES:
1. CONTRACTOR IS RESPONSIBLE FOR VERIFYING EXACT LOCATIONS AND SIZES OF ALL EQUIPMENT, VENTS, FANS, ETC.

NEW CONSTRUCTION NOTES:

1. GENERAL CONTRACTOR TO PATCH THE ROOF WHERE THE REMOVED ROOFTOP EQUIPMENT WAS LOCATED.
2. EXISTING EXHAUST FAN TO REMAIN. BALANCE FAN THE THE AIR QUANTITY LISTED ON THE NEW WORK PLANS.
3. GENERAL CONTRACTOR TO PATCH THE ROOF WHERE THE BOILER COMBUSTION AIR AND VENT PIPING PENETRATED THE ROOF.
4. NEW ROOFTOP UNIT AND CURB. MODIFY THE EXISTING ROOF OPENING AS NECESSARY FOR THE NEW ROOFTOP UNIT FOOTPRINT AND DUCT PENETRATIONS. COORDINATE ROOF OPENINGS WITH GENERAL CONTRACTOR. FIELD VERIFY ALL EXISTING CONDITIONS.
5. NOT USED
6. GENERAL CONTRACTOR TO PATCH THE ROOF WHERE THE REMOVED EXHAUST FAN WAS LOCATED.
7. NEW EXHAUST FAN AND CURB. MODIFY THE EXISTING ROOF OPENING AS NECESSARY FOR THE NEW EXHAUST FAN FOOTPRINT AND DUCT PENETRATION. COORDINATE ROOF OPENINGS WITH GENERAL CONTRACTOR. FIELD VERIFY ALL EXISTING CONDITIONS.
8. NEW EXHAUST FAN AND CURB. COORDINATE ROOF OPENING WITH GENERAL CONTRACTOR. COORDINATE DUCT DROP AND FAN LOCATION WITH EXISTING STRUCTURE BELOW.

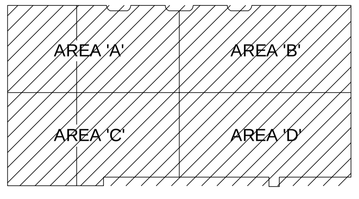

N

KEY PLAN

STRANG

ARCHITECTURE
ENGINEERING
INTERIOR DESIGN

STRANG INC.
6411 MINERAL POINT ROAD
MADISON, WI 53705-4395

T/ 608 276 9200
F/ 608 276 9204

Henneman Engineering Inc.
Madison:
1232 Fourier Drive, Suite 101
Madison, Wisconsin 53717-1960
T 608.833.7000 F 608.833.6996
Email: info@henneman.com
Website: http://www.henneman.com

© 2005 Henneman Engineering Inc. / IL reg. #184-000245
(001-013372) (562-026272)

JOB NO. 07-5780

ISSUED FOR:
CONSTRUCTION
INTERIOR REMODEL
01-29-09

DRAWING SET	CD
COPYRIGHT STRANG, INC.	2009
FILE NAME	M202
REVISIONS	
DRAWN	KSO
CHECKED	CCL
DATE	01-29-09
PROJECT NO.	2007070

PROJECT TITLE

DANE COUNTY
JOB CENTER
INTERIOR REMODEL
BID #109001

1819 ABERG AVENUE
MADISON, WISCONSIN

SHEET TITLE

Roof Plan
HVAC
New Work

SHEET NO.

M202

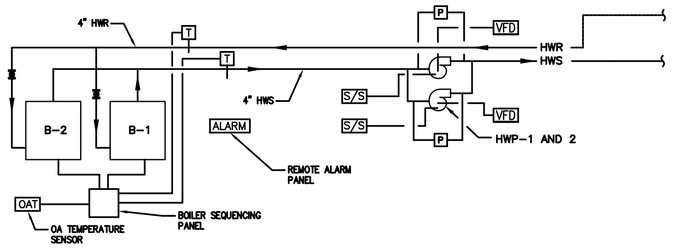

SEQUENCE OF OPERATION:

HEATING WATER PUMPS:
PUMP CONTROLS SHALL BE ELECTRIC OR DDC. PROVIDE CONTROL DEVICES IN A CONTROL PANEL LOCATED NEAR THE HEATING PUMPS. MAINTAIN CONSTANT DIFFERENTIAL PRESSURE (MEASURED 2/3 DOWNSTREAM OF THE PUMPS) OF 20 FT HD (ADJ) BY MODULATING THE PUMP SPEED THROUGH VFD. THE CONTROLLER SHALL ACTIVATE LEAD HW PUMP TO RUN WHEN ANY BOILER IS ENERGIZED THROUGH THE BOILER CONTROL PANEL. PROVIDE SIGNAL WIRING FROM A CONTACT IN THE BOILER CONTROLLER TO THE PUMP CONTROLLER, TO PROVIDE BOILER OPERATION SIGNAL. IF THE LEAD PUMP FAILS, AS SENSED BY A DIFFERENTIAL PRESSURE SWITCH LOCATED ACROSS EACH PUMP, PUMP CONTROLLER SHALL DEACTIVE LEAD PUMP, ACTIVATE STANDBY PUMP, AND ACTIVATE AN AUDIBLE AND VISUAL ALARM AT THE PUMP CONTROLLER. PROVIDE A SILENCE BUTTON FOR THE AUDIBLE ALARM. THE SYSTEM SHALL SWITCH BACK TO NORMAL LEAD PUMP OPERATION AFTER THE CAUSE OF THE ALARM HAS BEEN CORRECTED AND A MANUAL RESET BUTTON IS PRESSED AT THE CONTROLLER. CONTROLLER SHALL SWITCH BETWEEN LEAD AND STANDBY PUMPS ON A TIMED BASIS (EVERY 500 HOURS OF OPERATION). LEAD/STANDBY PUMP SELECTOR SWITCH, PUMP RUNNING LIGHTS, AUDIBLE ALARM HORN, RED ALARM LIGHT, RESET BUTTON, AND ALARM SILENCE BUTTON SHALL BE MOUNTED ON THE FACE OF THE PUMP CONTROL PANEL. PROVIDE CONTROL WIRING AND POWER TO EACH BOILER CIRCULATING PUMP. WHEN BOILER IS ACTIVATED, THE BOILER CIRCLATION PUMP SHALL PROVE OPERATIONAL PRIOR TO THE BURNER FIRING.

VFD CONTROL:
PROVIDE PRESSURE DIFFERENTIAL AND 2-WAY CONTROL VALVE AT END OF SYSTEM. MAINTAIN MINIMUM PRESSURE DIFFERENTIAL AS DETERMINED BY T&B. OPEN 2-WAY CONTROL VALVE WHENEVER VFD DROPS TO 18%. CLOSE VALVE WHEN VFD SPEEDS UP TO 40%. (ADJUSTABLE)

BOILERS SHALL BE ENERGIZED THROUGH A MANUAL INPUT SIGNAL AT THE BOILER SEQUENCING PANEL. BOILER CONTROL PANEL SHALL MAINTAIN HWS TEMPERATURE OF 180°F (MAXIMUM). PROVIDE ALARM FROM EACH BOILER CONTROL PANEL TO ALARM PANEL IN LOWER LEVEL. IF ALARM SIGNAL IS INITIATED BY BOILER CONTROL PANEL. BOILER SEQUENCING PANEL SHALL RESET BOILER HWS SETPOINT BETWEEN 110°F AND 180°F, BASED ON AN OUTSIDE AIR TEMPERATURE RANGE OF 50°F AND 0°F. THESE SETTINGS SHALL BE ADJUSTABLE. BOILERS SHALL BE OFF DURING THE NIGHT CYCLE AND WHEN OUTSIDE AIR TEMPERATURE IS ABOVE 55°F. WIRING OF THE BOILER CONTROLLERS, BOILER SEQUENCING PANEL, AND ALARM PANEL SHALL BE BY THE TEMPERATURE CONTROLS CONTRACTOR. REMOTE ALARM PANEL SHALL BE PROVIDED WITH A GREEN 'NORMAL' AND RED 'ALARM' LIGHT ON THE FACE, FOR EACH BOILER.

5 / M203 HEATING WATER SYSTEM CONTROL

NO SCALE

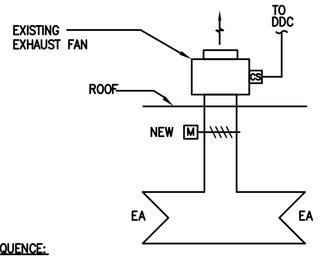

CONTROL SEQUENCE:

CONTROLS ARE ELECTRIC.

EXHAUST FAN SHALL BE CONROLLED BY A MANUAL TWO-POSITION SWITCH LOCATED ADJACENT TO THE ENTRY DOOR TO THE MECHANICAL ROOM. WHEN POSITIONED TO 'ON' THE CONTROL DAMPER SHALL FULLY OPEN AND THE FAN SHALL RUN CONTINUOUSLY. WHEN POSITIONED TO 'OFF' THE FAN SHALL REMAIN OFF AND THE CONTROL DAMPER SHALL FULLY CLOSE.

4 / M203 MECH. ROOM EXHAUST FAN CONTROL

NO SCALE

NOTE:
INSTALL THE BOILERS, BOILER VENTING, COMBUSTIN AIR, PIPING, GAS PIPING AND DRAIN PIPING PER THE MANUFACTURERS WRITTEN INSTUCTIONS. BOILER CIRCULATION PUMPS ARE CONTROLLED THROUGH THE BOILER CONTROL PANEL. WHEN THE BOILERS ARE ON, THE PUMP SHALL BE ENERGIZED.

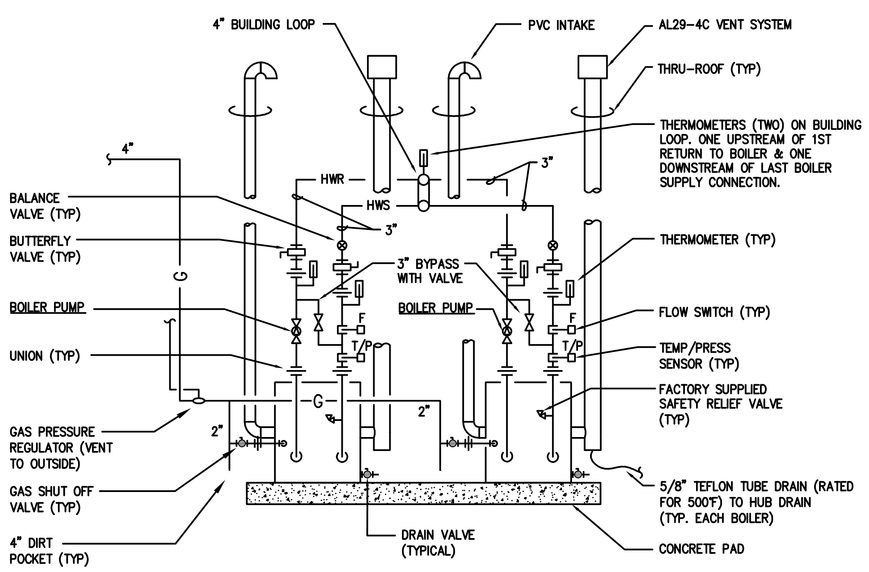

3 / M203 HOT WATER BOILER SCHEMATIC

NO SCALE

| DDC INPUT/OUTPUT SUMMARY TABLE | | |

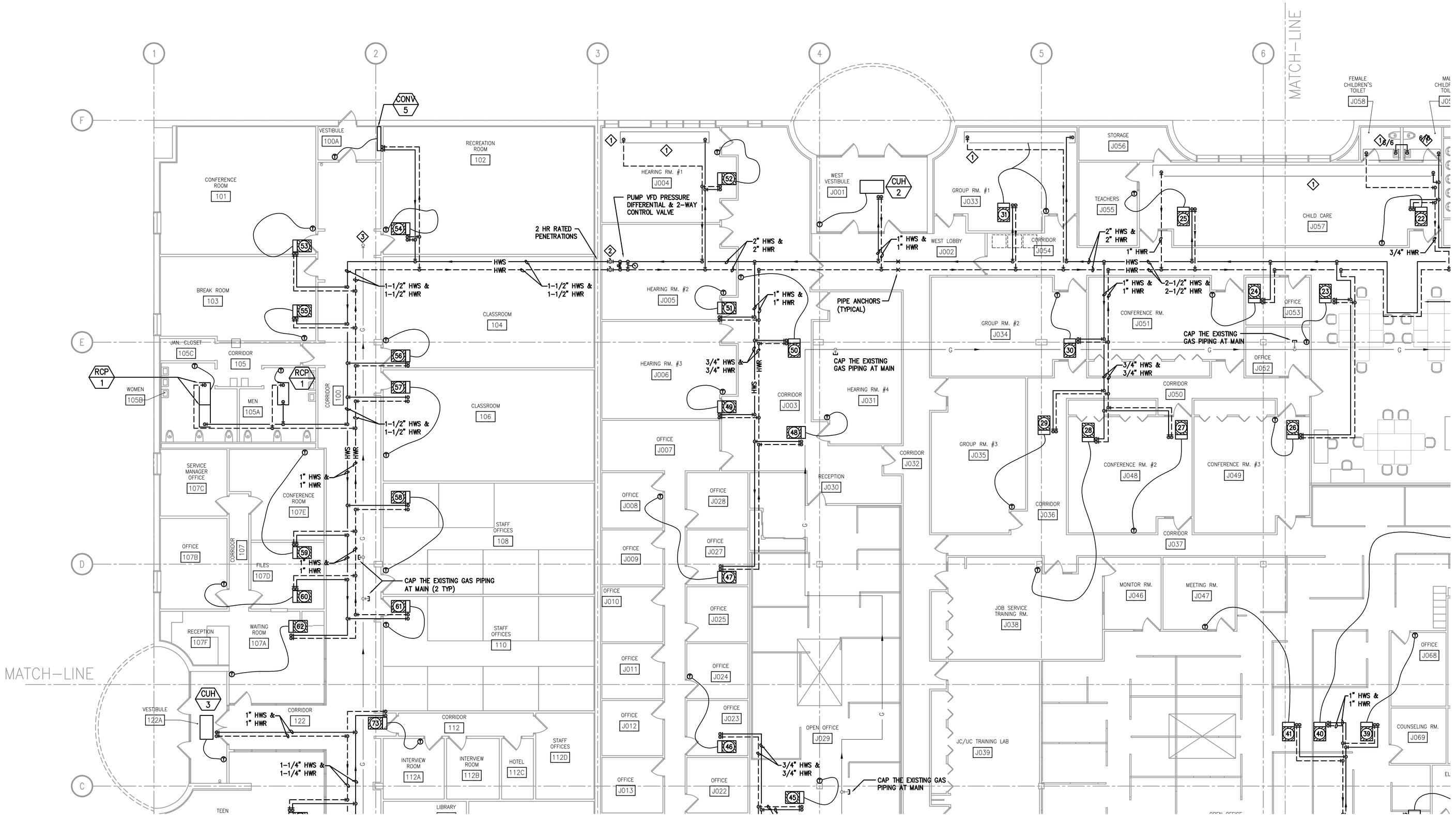

1 M301A FIRST FLOOR PLAN – AREA 'A'

SCALE: 1/8" = 1'-0"

12" 0 1' 5' 10' 20'

NEW WORK NOTES:

1. EXISTING HOT WATER CEILING RADIANT CEILING PANELS TO REMAIN. CONNECT NEW HOT WATER PIPING AS SHOWN ON PLANS. CONTRACTOR TO VERIFY INSULATION EXISTS ON TOP OF RADIANT PANELS. INSULATION TO BE INSTALLED IF ABSENT.
2. SHUT OFF VALVES. VALVES REQUIRED FOR PHASING OF PROJECT.
3. CONNECT EXISTING GAS PIPING UP THRU ROOF TO THE NEW ROOF TOP UNIT. PROVIDE NEW SHUT OFF VALVE, UNION AND 4" DIRT POCKET AT UNIT.
4. CONNECT NEW GAS PIPING UP THRU ROOF TO THE NEW ROOF TOP UNIT. PROVIDE NEW SHUT OFF VALVE, UNION AND 4" DIRT POCKET AT UNIT.

ALL HWS/HWR RUNOUT PIPING TO VAV REHEAT COILS, RADIANT PANELS, AND CONVECTORS ARE TO BE 3/4" UNLESS OTHERWISE NOTED.

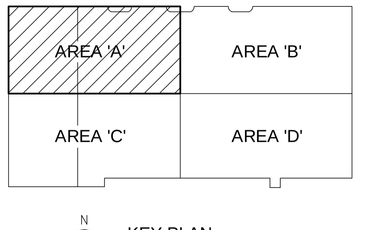

N

KEY PLAN

STRANG

ARCHITECTURE
ENGINEERING
INTERIOR DESIGN

STRANG INC.
6411 MINERAL POINT ROAD
MADISON, WI 53705-4395

T/ 608 276 9200
F/ 608 276 9204

Henneman Engineering Inc.

Madison:
1232 Fourier Drive, Suite 101
Madison, Wisconsin 53717-1960
T 608.833.7000 F 608.833.6996
Email: info@henneman.com
Website: http://www.henneman.com

© 2005 Henneman Engineering Inc. / IL reg. #184-000245 (001-013372) (062-026272)

JOB NO. 07-5780

ISSUED FOR:
CONSTRUCTION
INTERIOR REMODEL
01-29-09

DRAWING SET	CD
COPYRIGHT STRANG, INC.	2009
FILE NAME	M301
REVISIONS	
DRAWN	KSO
CHECKED	CCL
DATE	01-29-09
PROJECT NO.	2007070

PROJECT TITLE

DANE COUNTY
JOB CENTER
INTERIOR REMODEL
BID #109001

1819 ABERG AVENUE
MADISON, WISCONSIN

SHEET TITLE

First Floor Plan
Area A - HVAC
New Work - Piping

SHEET NO.

M301A

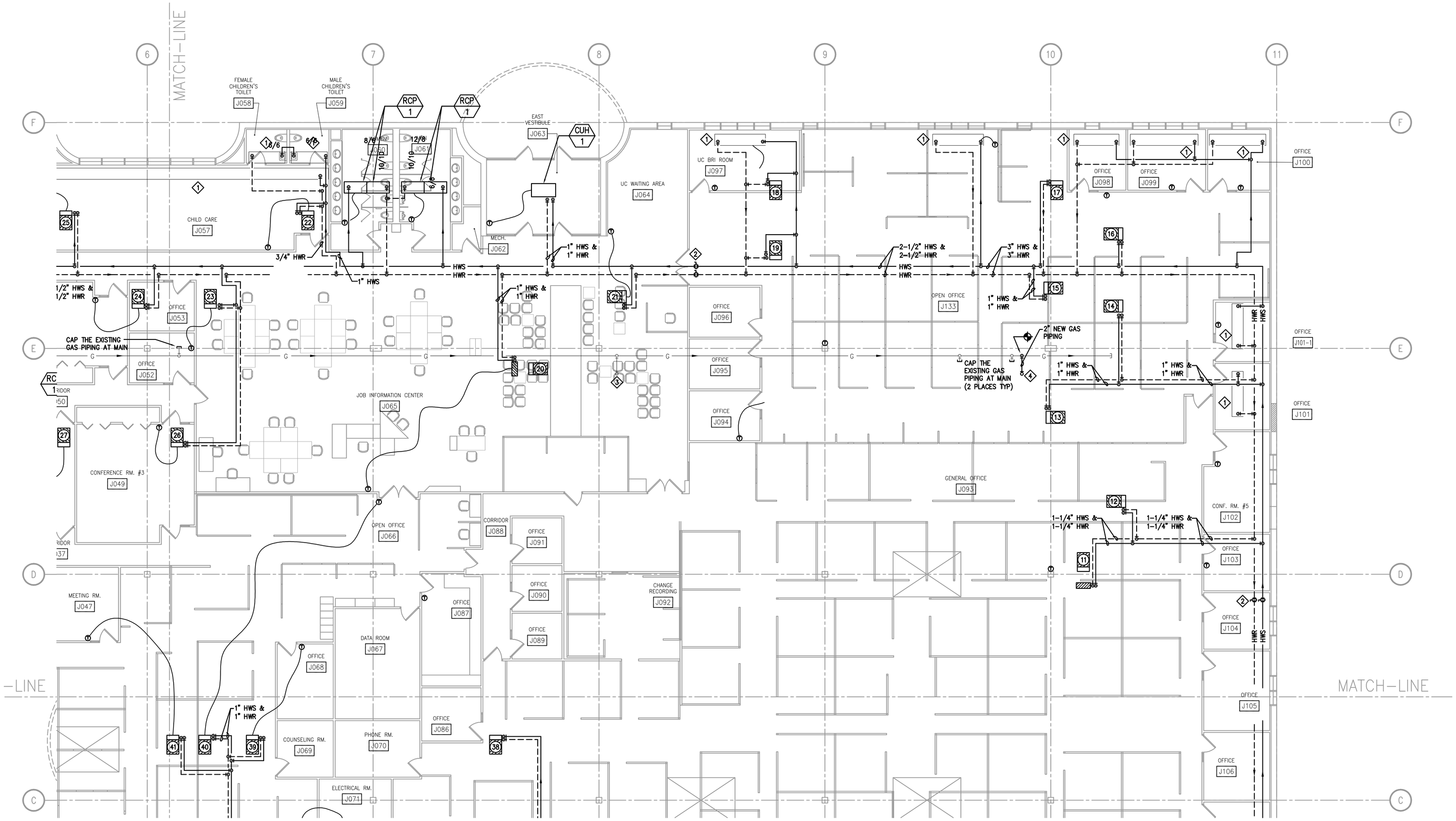

1 M301B FIRST FLOOR PLAN – AREA 'B'

SCALE: 1/8" = 1'-0"

12" 0 1' 5' 10' 20'

NEW WORK NOTES:

1. EXISTING HOT WATER CEILING RADIANT CEILING PANELS TO REMAIN. CONNECT NEW HOT WATER PIPING AS SHOWN ON PLANS. CONTRACTOR TO VERIFY INSULATION EXISTS ON TOP OF RADIANT PANELS. INSULATION TO BE INSTALLED IF ABSENT.
2. SHUT OFF VALVES. VALVES REQUIRED FOR PHASING OF PROJECT.
3. CONNECT EXISTING GAS PIPING UP THRU ROOF TO THE NEW ROOF TOP UNIT. PROVIDE NEW SHUT OFF VALVE, UNION AND 4" DIRT POCKET AT UNIT.
4. CONNECT NEW GAS PIPING UP THRU ROOF TO THE NEW ROOF TOP UNIT. PROVIDE NEW SHUT OFF VALVE, UNION AND 4" DIRT POCKET AT UNIT.

ALL HWS/HWR RUNOUT PIPING TO VAV REHEAT COILS, RADIANT PANELS, AND CONVECTORS ARE TO BE 3/4" UNLESS OTHERWISE NOTED.

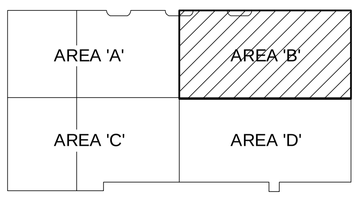

N

KEY PLAN

STRANG

ARCHITECTURE
ENGINEERING
INTERIOR DESIGN

STRANG INC.
6411 MINERAL POINT ROAD
MADISON, WI 53705-4395

T/ 608 276 9200
F/ 608 276 9204

Henneman Engineering Inc.
Madison:
1232 Fourier Drive, Suite 101
Madison, Wisconsin 53717-1960
T 608.833.7000 F 608.833.6996
Email: info@henneman.com
Website: http://www.henneman.com
© 2005 Henneman Engineering Inc. / E. reg. #184-000245
(501-013372) (562-026272)
JOB NO. 07-5780

ISSUED FOR:
CONSTRUCTION
INTERIOR REMODEL
01-29-09

DRAWING SET	CD
COPYRIGHT STRANG, INC.	2009
FILE NAME	M301
REVISIONS	
DRAWN	KSO
CHECKED	CCL
DATE	01-29-09
PROJECT NO.	2007070

PROJECT TITLE

DANE COUNTY
JOB CENTER
INTERIOR REMODEL
BID #109001

1819 ABERG AVENUE
MADISON, WISCONSIN

SHEET TITLE

First Floor Plan
Area B - HVAC
New Work - Piping

SHEET NO.

M301B

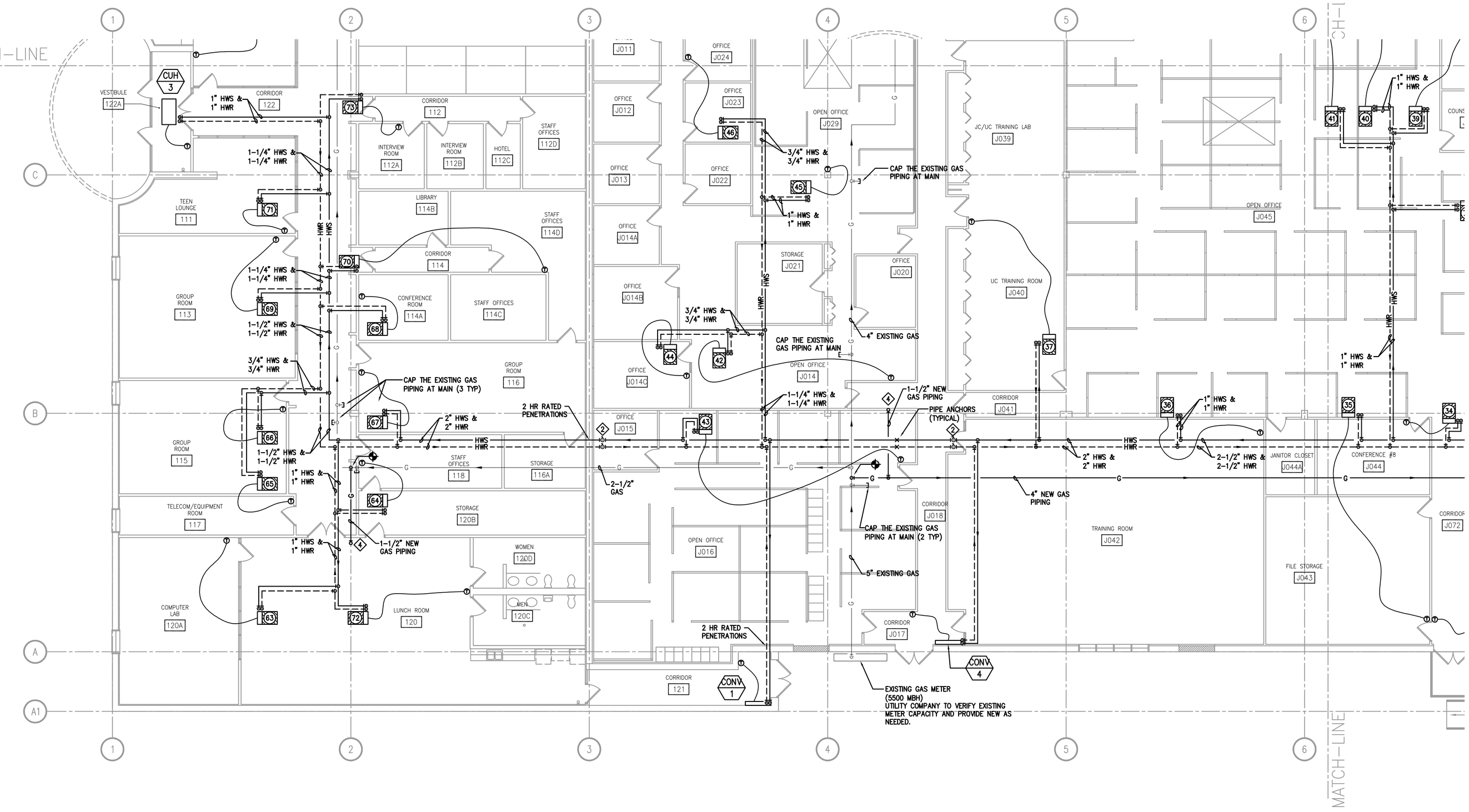

1 M301C FIRST FLOOR PLAN – AREA 'C'

SCALE: 1/8" = 1'-0"

12"0 1' 5' 10' 20'

NEW WORK NOTES:

1. EXISTING HOT WATER CEILING RADIANT CEILING PANELS TO REMAIN. CONNECT NEW HOT WATER PIPING AS SHOWN ON PLANS. CONTRACTOR TO VERIFY INSULATION EXISTS ON TOP OF RADIANT PANELS. INSULATION TO BE INSTALLED IF ABSENT.
2. SHUT OFF VALVES. VALVES REQUIRED FOR PHASING OF PROJECT.
3. CONNECT EXISTING GAS PIPING UP THRU ROOF TO THE NEW ROOF TOP UNIT. PROVIDE NEW SHUT OFF VALVE, UNION AND 4" DIRT POCKET AT UNIT.
4. CONNECT NEW GAS PIPING UP THRU ROOF TO THE NEW ROOF TOP UNIT. PROVIDE NEW SHUT OFF VALVE, UNION AND 4" DIRT POCKET AT UNIT.

ALL HWS/HWR RUNOUT PIPING TO VAV REHEAT COILS, RADIANT PANELS, AND CONVECTORS ARE TO BE 3/4" UNLESS OTHERWISE NOTED.

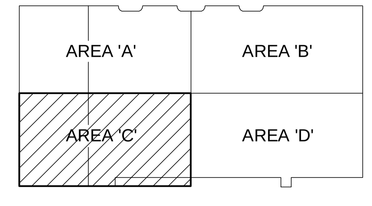

KEY PLAN

STRANG

ARCHITECTURE
ENGINEERING
INTERIOR DESIGN

STRANG INC.
6411 MINERAL POINT ROAD
MADISON, WI 53705-4395

T/ 608 276 9200
F/ 608 276 9204

Henneman Engineering Inc.
Madison:
1232 Fourier Drive, Suite 101
Madison, Wisconsin 53717-1960
T 608.833.7000 F 608.833.6996
Email: info@henneman.com
Website: http://www.henneman.com
© 2009 Henneman Engineering Inc. / S. reg. #184-000245
(001-013373) (063-026372)
JOB NO. 07-5780

ISSUED FOR:
CONSTRUCTION
INTERIOR REMODEL
01-29-09

DRAWING SET	CD
COPYRIGHT STRANG, INC.	2009
FILE NAME	M301
REVISIONS	
DRAWN	KSO
CHECKED	CCL
DATE	01-29-09
PROJECT NO.	2007070

PROJECT TITLE

DANE COUNTY
JOB CENTER
INTERIOR REMODEL
BID #109001

1819 ABERG AVENUE
MADISON, WISCONSIN

SHEET TITLE

First Floor Plan
Area C - HVAC
New Work - Piping

SHEET NO.

M301C

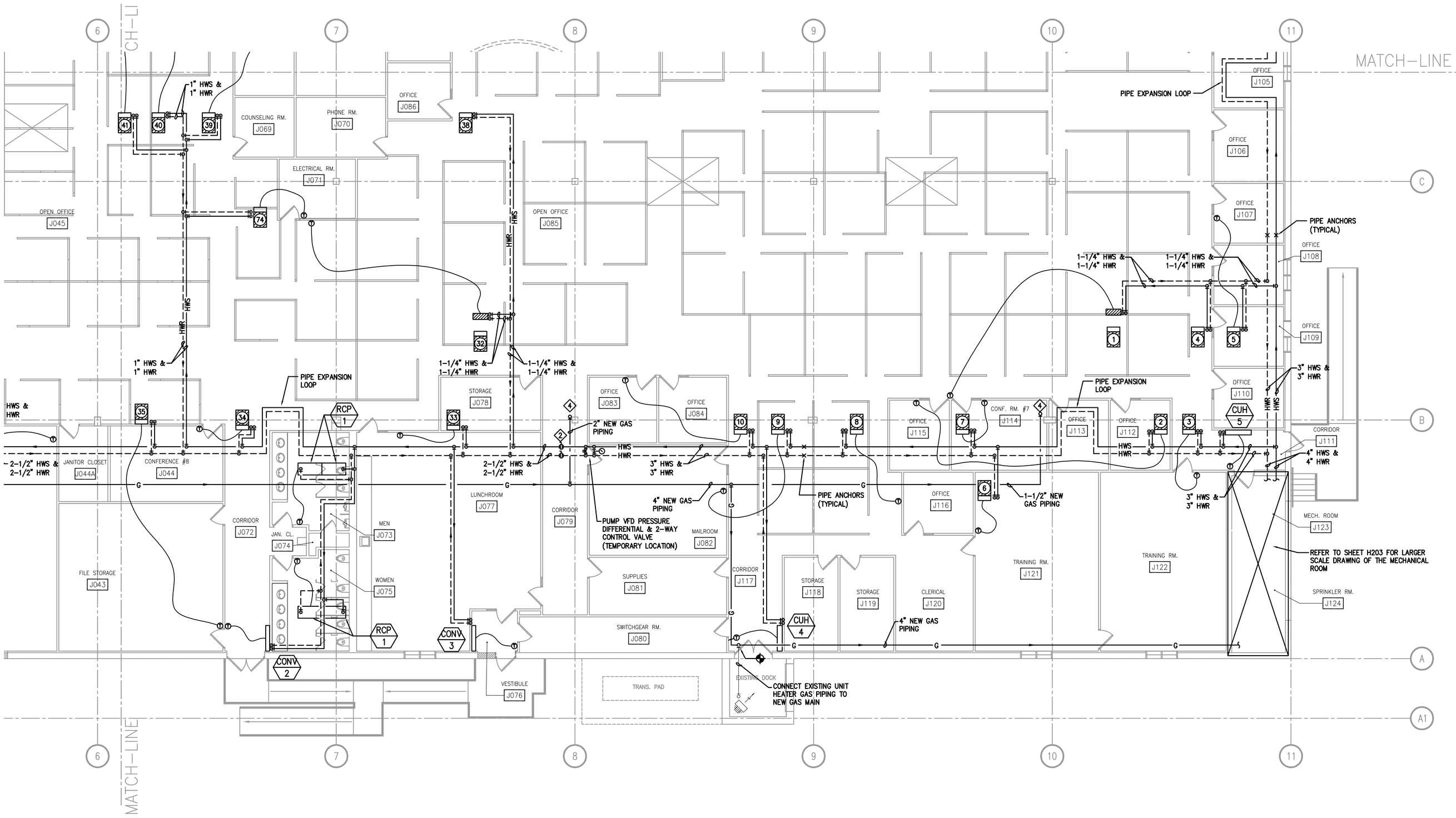

1 M301D FIRST FLOOR PLAN – AREA 'D'

SCALE: 1/8" = 1'-0"

12" 0 1' 5' 10' 20'

NEW WORK NOTES:

1. EXISTING HOT WATER CEILING RADIANT CEILING PANELS TO REMAIN. CONNECT NEW HOT WATER PIPING AS SHOWN ON PLANS. CONTRACTOR TO VERIFY INSULATION EXISTS ON TOP OF RADIANT PANELS. INSULATION TO BE INSTALLED IF ABSENT.
2. SHUT OFF VALVES. VALVES REQUIRED FOR PHASING OF PROJECT.
3. CONNECT EXISTING GAS PIPING UP THRU ROOF TO THE NEW ROOF TOP UNIT. PROVIDE NEW SHUT OFF VALVE, UNION AND 4" DIRT POCKET AT UNIT.
4. CONNECT NEW GAS PIPING UP THRU ROOF TO THE NEW ROOF TOP UNIT. PROVIDE NEW SHUT OFF VALVE, UNION AND 4" DIRT POCKET AT UNIT.

ALL HWS/HWR RUNOUT PIPING TO VAV REHEAT COILS, RADIANT PANELS, AND CONVECTORS ARE TO BE 3/4" UNLESS OTHERWISE NOTED.

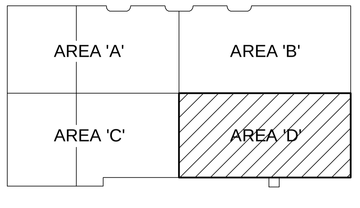

N

KEY PLAN

STRANG

ARCHITECTURE
ENGINEERING
INTERIOR DESIGN

STRANG INC.
6411 MINERAL POINT ROAD
MADISON, WI 53705-4395

T/ 608 276 9200
F/ 608 276 9204

Henneman Engineering Inc.
Madison:
1232 Fourier Drive, Suite 101
Madison, Wisconsin 53717-1960
T 608.833.7000 F 608.833.6996
Email: info@henneman.com
Website: http://www.henneman.com

© 2006 Henneman Engineering Inc. / IL reg. #184-000245
(201-013372) (262-026272)

JOB NO. 07-5780

ISSUED FOR:
CONSTRUCTION
INTERIOR REMODEL
01-29-09

DRAWING SET	CD
COPYRIGHT STRANG, INC.	2009
FILE NAME	M301
REVISIONS	
DRAWN	KSO
CHECKED	CCL
DATE	01-29-09
PROJECT NO.	2007070

PROJECT TITLE

DANE COUNTY
JOB CENTER
INTERIOR REMODEL
BID #109001

1819 ABERG AVENUE
MADISON, WISCONSIN

SHEET TITLE

First Floor Plan
Area D - HVAC
New Work - Piping

SHEET NO.

M301D

HEATING/VENTILATING SYMBOL LIST

SYMBOL	DESCRIPTION
— C —	CONDENSER WATER FLOW
- - -CR- - -	CONDENSER WATER RETURN
—HWS—	HOT WATER SUPPLY
- - -HWR- - -	HOT WATER RETURN
— CH —	CHILLED WATER SUPPLY
- - - CHR - - -	CHILLED WATER RETURN
—LPS—	LOW PRESSURE STEAM
- - - LPR - - -	LOW PRESSURE STEAM RETURN
— D —	DRAIN LINE
— RL —	REFRIGERANT LIQUID LINE
— RD —	REFRIGERANT DISCHARGE LINE
— MU —	MAKE UP WATER
—CPD—	CONDENSATE PUMP DISCHARGE PIPING
	BUTTERFLY VALVE
	GATE VALVE
	CHECK VALVE
	CALIBRATED BALANCE VALVE
	AUTOMATIC TWO-WAY CONTROL VALVE (ELECTRIC)
	GLOBE VALVE
	BALL VALVE
	RELIEF VALVE
	PIPE ANCHOR
	THERMOMETER
	STEAM TRAP
	PRESSURE GAUGE
	MANUAL AIR VENT
	ELBOW TURNED UP
	ELBOW TURNED DOWN
	TEE – TOP OUTLET
	TEE – BOTTOM OUTLET
	SCREWED UNION
	FLANGED UNION
	PRESSURE REDUCING VALVE
	CONCENTRIC REDUCER
	ECCENTRIC REDUCER
	STRAINER
	GAGE COCK
	PIPE GUIDE
	CAP OR PLUG FOR ≤ 2", BLIND FLANGE FOR > 2"
	VACUUM BREAKER
	FLOW MEASURING DEVICE
	EXISTING TO BE REMOVED
	FLEXIBLE PUMP OR PIPE CONNECTION
	SUPPLY AIR DUCT (TOWARD)
	SUPPLY AIR DUCT (AWAY)
	RETURN OR OUTDOOR AIR DUCT (TOWARD)
	RETURN OR OUTDOOR AIR DUCT (AWAY)
24/12	SUPPLY — FIRST NUMBER IS SIDE SHOWN, SECOND NUMBER IS SIDE NOT SHOWN, ARROWS INDICATE DIRECTION OF FLOW
24/12	RETURN/EXHAUST
	TURNING VANES
	MANUAL VOLUME DAMPER
BD	BACKDRAFT DAMPER
M	MOTORIZED DAMPER (MOD)
FD SD	FIRE DAMPER / SMOKE DAMPER
	FLEXIBLE DUCT CONNECTION
	FLEXIBLE DUCT
	ACCESS PANEL
R	INCLINED RISE (IN DIRECTION OF AIR FLOW)
D	INCLINED DROP (IN DIRECTION OF AIR FLOW)
	SUPPLY AIR
RA	RETURN AIR
EA	EXHAUST AIR
OA	OUTSIDE AIR
OED	OPEN ENDED DUCT
ΔP	PRESSURE DROP
T	ROOM TEMPERATURE SENSOR
P	ROOM PRESSURE SENSOR
H	HUMIDISTAT
T	THERMOSTAT
	NEW CONNECTION
	REDUCTION IN DUCT SIZE
SD	DUCT SMOKE DETECTOR

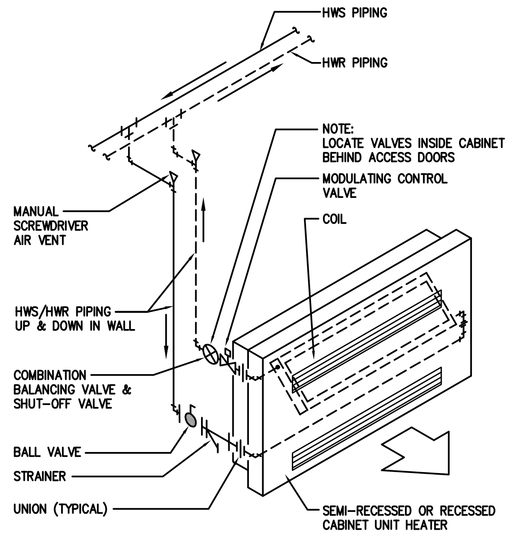

G / M401 VERTICAL CABINET UNIT HEATER DETAIL

NO SCALE

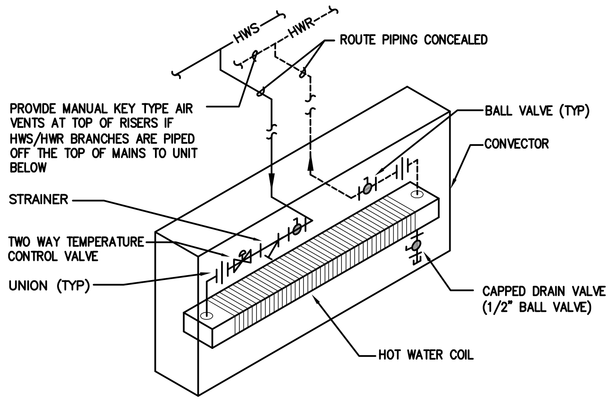

H / M401 DOWNFEED HOT WATER CONVECTOR PIPING DETAIL

NO SCALE

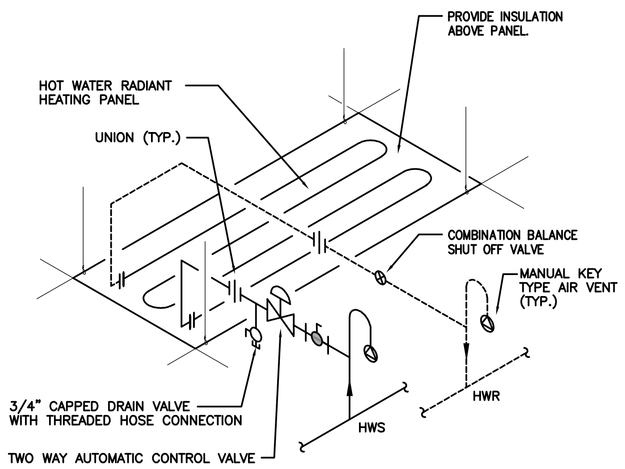

I / M401 HOT WATER RADIANT CEILING PANEL DETAIL

NO SCALE

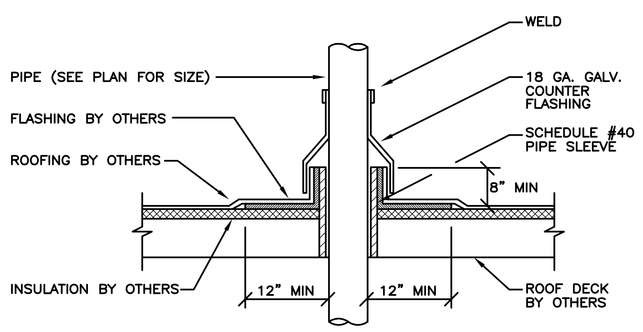

J / M401 PIPE THRU ROOF DETAIL

NO SCALE

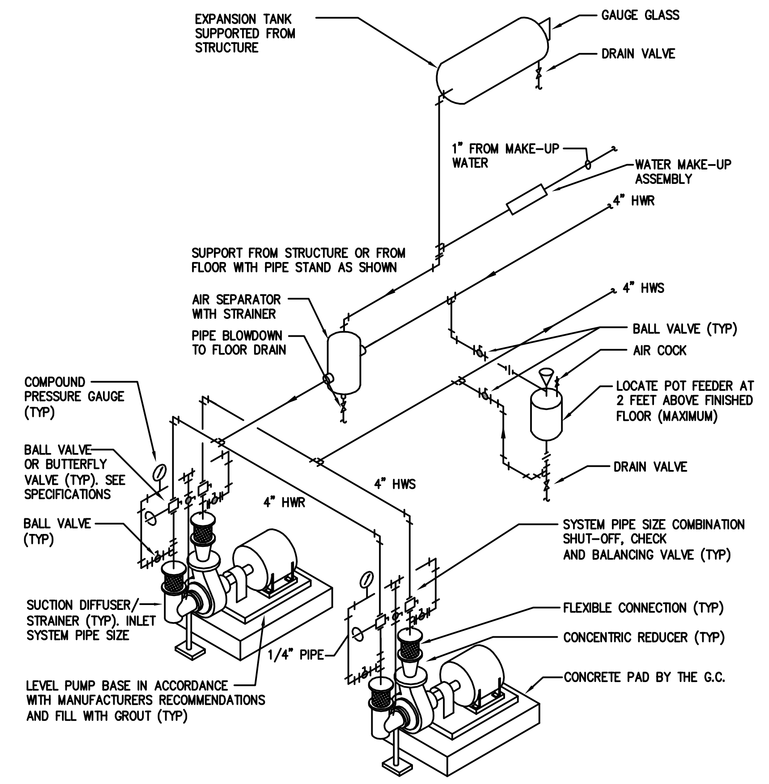

D / M401 HOT WATER SYSTEM PUMP PIPING DETAIL

NO SCALE

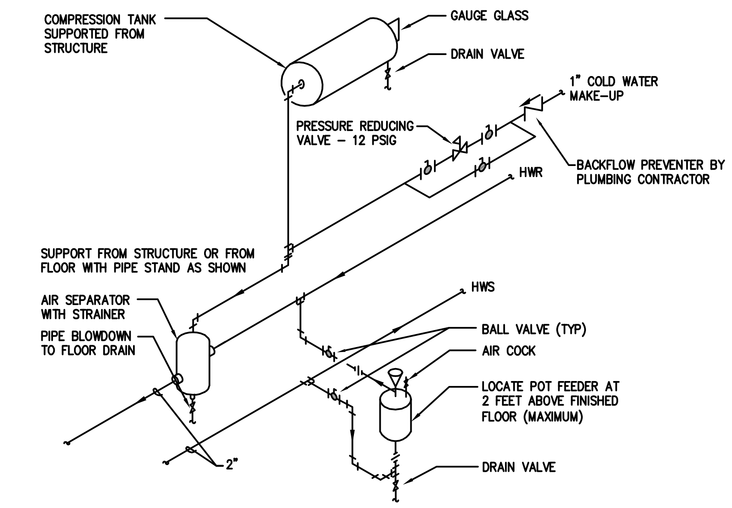

E / M401 HOT WATER SYSTEM PIPING DETAIL

NO SCALE

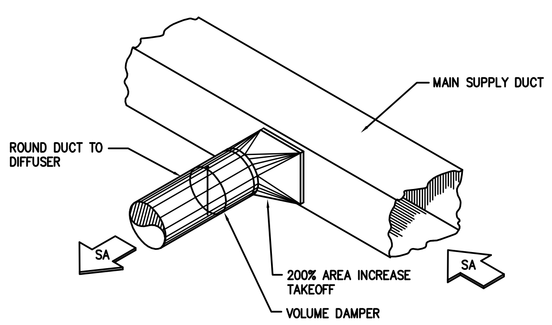

F / M401 BRANCH DUCT TAKEOFF

NO SCALE

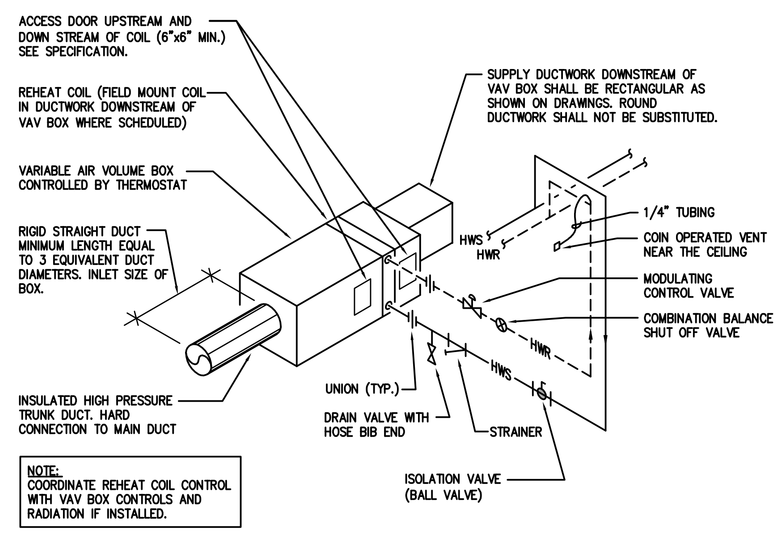

A / M401 VAV BOX W/REHEAT PIPING DETAIL (TYPICAL)

NO SCALE

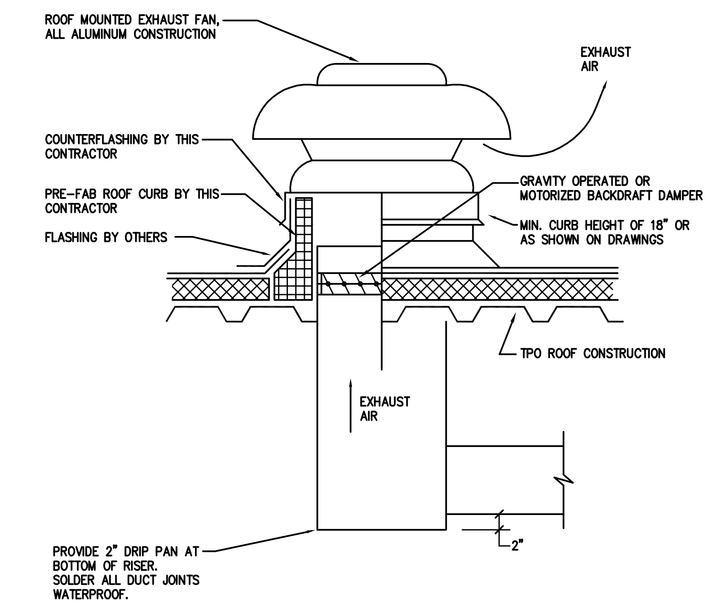

B / M401 POWER ROOF VENTILATOR (PRV) DETAIL

NO SCALE

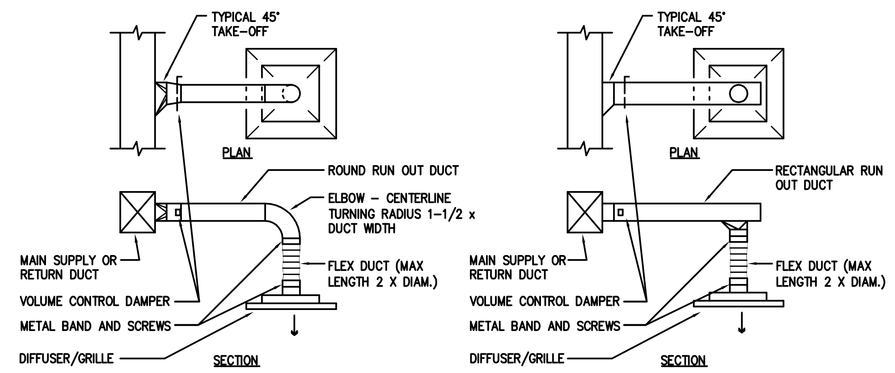

NOTES:
1. CONTRACTOR HAS THE OPTION TO USE EITHER METHOD SHOWN.
2. FLEXIBLE DUCT SHALL BE ONLY USED FOR ALIGNMENT AND NOT FOR OFFSET OR CHANGE IN DIRECTION.
3. CONTRACTOR SHALL PROVIDE TRANSITION FROM NECK SIZE INDICATED TO DUCT SIZE INDICATED AS REQUIRED.

C / M401 SUPPLY AND RETURN DUCT TAKE-OFF DETAIL

NO SCALE

STRANG

ARCHITECTURE
ENGINEERING
INTERIOR DESIGN

STRANG INC.
6411 MINERAL POINT ROAD
MADISON, WI 53705-4395

T/ 608 276 9200
F/ 608 276 9204

Henneman Engineering Inc.
Madison:
1232 Fourier Drive, Suite 101
Madison, Wisconsin 53717-1960
T 608.833.7000 F 608.833.6996
Email: info@henneman.com
Website: http://www.henneman.com

© 2009 Henneman Engineering Inc. / S. reg. #104-000245
(001-013373) (063-026372)

JOB NO. 07-5780

ISSUED FOR:
CONSTRUCTION
INTERIOR REMODEL
01-29-09

DRAWING SET	CD
COPYRIGHT STRANG, INC.	2009
FILE NAME	M401
REVISIONS	
DRAWN	KSO
CHECKED	CCL
DATE	01-29-09
PROJECT NO.	2007070

PROJECT TITLE

DANE COUNTY
JOB CENTER
INTERIOR REMODEL
BID #109001

1819 ABERG AVENUE
MADISON, WISCONSIN

SHEET TITLE

HVAC
DETAILS

SHEET NO.

M401

GRILLE AND DIFFUSER SCHEDULE

MARK	DESCRIPTION	NECK SIZE	MODEL	AIR PATTERN	FRAME	CFM	MAX S.P. (WATER)	THROW (FEET)	REMARKS
1	ALUMINUM SQUARE CEILING PLAQUE DIFFUSER	6"ø	SHPA	SEE NOTE 4	T-BAR LAY-IN	0-170	0.10	7'-11'	SEE NOTES 2,3,4,5
2	ALUMINUM SQUARE CEILING PLAQUE DIFFUSER	8"ø	SHPA	SEE NOTE 4	T-BAR LAY-IN	171-240	0.10	10'-17'	SEE NOTES 2,3,4,5
3	ALUMINUM SQUARE CEILING PLAQUE DIFFUSER	10"ø	SHPA	SEE NOTE 4	T-BAR LAY-IN	241-370	0.10	13'-23'	SEE NOTES 2,3,4,5
4	ALUMINUM SQUARE CEILING PLAQUE DIFFUSER	12"ø	SHPA	SEE NOTE 4	T-BAR LAY-IN	371-460	0.10	16'-28'	SEE NOTES 2,3,4,5
5	ALUMINUM SQUARE CEILING PLAQUE DIFFUSER	14"ø	SHPA	SEE NOTE 4	T-BAR LAY-IN	461-630	0.10	20'-34'	SEE NOTES 2,3,4,5
6	ALUMINUM LOUVERED FACE GRILLE-45° DEFLECTION	8"x8"	RAAB	RETURN/ EXHAUST	T-BAR LAY-IN	0-125	0.10	-	SEE NOTES 1,2,3,5
7	ALUMINUM LOUVERED FACE GRILLE-45° DEFLECTION	10"x10"	RAAB	RETURN/ EXHAUST	T-BAR LAY-IN	126-200	0.10	-	SEE NOTES 1,2,3,5
8	ALUMINUM LOUVERED FACE GRILLE-45° DEFLECTION	12"x12"	RAAB	RETURN/ EXHAUST	T-BAR LAY-IN	201-275	0.10	-	SEE NOTES 1,2,3,5
9	ALUMINUM LOUVERED FACE GRILLE-45° DEFLECTION	14"x14"	RAAB	RETURN/ EXHAUST	T-BAR LAY-IN	276-400	0.10	-	SEE NOTES 1,2,3,5
10	ALUMINUM LOUVERED FACE GRILLE-45° DEFLECTION	16"x16"	RAAB	RETURN/ EXHAUST	T-BAR LAY-IN	401-510	0.10	-	SEE NOTES 1,2,3,5
11	ALUMINUM LOUVERED FACE GRILLE-45° DEFLECTION	18"x18"	RAAB	RETURN/ EXHAUST	T-BAR LAY-IN	511-650	0.10	-	SEE NOTES 1,2,3,5
12	ALUMINUM LOUVERED FACE GRILLE-45° DEFLECTION	20"x20"	RAAB	RETURN/ EXHAUST	T-BAR LAY-IN	651-800	0.10	-	SEE NOTES 1,2,3,5
13	ALUMINUM LOUVERED FACE GRILLE-45° DEFLECTION	22"x22"	RAAB	RETURN/ EXHAUST	T-BAR LAY-IN	801-965	0.10	-	SEE NOTES 1,2,3,5
14	ALUMINUM LOUVERED FACE GRILLE-45° DEFLECTION	22"x44"	RAAB	RETURN/ EXHAUST	T-BAR LAY-IN	966-2000	0.10	-	SEE NOTES 1,2,3,5
15	DOUBLE DEF. LOUVERED FACE SUPPLY GRILLE - 3/4" BLADES	SEE PLANS	RADB	SIDEWALL SUPPLY	SURFACE MOUNT	SEE PLANS	0.10	-	SEE NOTE 3, 5

NOTES:
1. PROVIDE 24"x24" METAL PANEL FOR LAY-IN CEILING APPLICATION
2. OFF-WHITE FINISH. COORDINATE FRAME WITH NEW CEILING.
3. ALL GRILLES AND DIFFUSERS SHALL BE ALUMINUM AND SHALL NOT EXCEED NC-25 REGARDLESS OF SIZE LISTED.
4. ALL SUPPLY CEILING DIFFUSERS ARE 4-WAY THROW UNLESS NOTED OTHERWISE ON PLANS
5. SELECTION BASED ON CARNES.

HOT WATER BOILER SCHEDULE

UNIT TAG	MANUFACTURER	MODEL NUMBER	TYPE	INPUT MBH (GAS)	OUTPUT MBH (WATER	DRAFT TYPE	FLUE OUTLET/ INLET SIZE	LWT / EWT	OPERATING PRESSURE	OPERATING GAS PRESSURE	BOILER PRESSURE RATING (PSIG)	TOTAL AMPS	VOLTS/PHASE	REMARKS
B-1	THERMOSOLUTIONS	EVCA-1500	CONDENSING BOILER	1,500	1,410	FORCED	6"/8"	180/160	110 PSI	LOW	160	14	120/1	1
B-2	THERMOSOLUTIONS	EVCA-1500	CONDENSING BOILER	1,500	1,410	FORCED	6"/8"	180/160	110 PSI	LOW	160	14	120/1	1

NOTES:
1. PRESSURE RELIEF AT 30 PSIG

EXPANSION TANK SCHEDULE

MARK	DESCRIPTION	SYSTEM STORAGE CAPACITY (GAL)	TANK VOLUME (GAL)	SYSTEM TEMP. (°F)	RELIEF VALVE SETTING (PSIG)	REMARKS
ET-1	HOT WATER EXPANSION TANK	1000	100	180	30	---

PUMP SCHEDULE

MARK	DESCRIPTION	MANUFACTURER	MODEL NUMBER	GPM	IMPELLER SIZE INCH	SUCTION/DISCHARGE SIZES (IN.)	HEAD (FT OF WATER)		REQUIRED NPSH (FT OF WATER)	FLUID TEMP	MINIMUM EFF. %	MOTOR DATA					REMARKS
							OPERATING	SHUT-OFF				BHP	HP	RPM	VOLTS	PHASE	
P-1	BASE MOUNTED	BELL & GOSSET	15102E	170	10 1/4"	3" / 2"	100	110	-	180	67	6.5	7.5	1750	208	3	1
P-1	BASE MOUNTED	BELL & GOSSET	15102E	170	10 1/4"	3" / 2"	100	110	-	180	67	6.5	7.5	1750	208	3	1

NOTES:
1. INSTALL PUMP ON 4" CONCRETE PAD.

VARIABLE FREQUENCE DRIVE SCHEDULE

MARK	SERVES	MOTOR SIZE (HP)	INPUT VOLTAGE	REMARKS
VFD-1	RTU-1 SF	15 HP	208/3	1
VFD-2	RTU-1 RF	4 HP	208/3	1
VFD-3	RTU-2 SF	10 HP	208/3	1
VFD-4	RTU-2 RF	3 HP	208/3	1
VFD-5	RTU-3 SF	15 HP	208/3	1
VFD-6	RTU-3 RF	4 HP	208/3	1
VFD-7	RTU-4 SF	15 HP	208/3	1
VFD-8	RTU-4 RF	3 HP	208/3	1
VFD-9	RTU-5 SF	15 HP	208/3	1
VFD-10	RTU-5 RF	4 HP	208/3	1
VFD-11	RTU-6 SF	7.5 HP	208/3	1
VFD-12	RTU-6 RF	2 HP	208/3	1
VFD-13	RTU-7 SF	7.5 HP	208/3	1
VFD-14	RTU-7 RF	3 HP	208/3	1
VFD-15	P-1	7.5 HP	208/3	-
VFD-16	P-2	7.5 HP	208/3	-

NOTES:
1. SUPPLIED BY ROOF TOP UNIT MANUFACTURER

ROOFTOP UNIT SCHEDULE

MARK	DESCRIPTION	LOCATION	SERVES	AAON MODEL #	UNIT WEIGHT (LBS.)	RETURN FAN					SUPPLY FAN						OUTSIDE AIR CFM	OA VOLUME DAMPER CONTROL	FILTERS	DX COOLING							NATURAL GAS FIRED HEATING		ELECTRICAL DATA					NOTES
						QTY	DESIGN CFM	EXT SP	FAN TYPE	FAN RPM	FAN BHP	QTY	DESIGN CFM	TOTAL SP	EXT SP	FAN TYPE	FAN RPM	FAN BHP				TOTAL MBH	SENS MBH	EAT	LAT	MAX APD	REFRIGERANT TYPE	ROWS	FPI	INPUT MBH	OUTPUT MBH	OA TEMP	RETURN FAN HP	SUPPLY FAN HP	MCA	VOLT	PH	
RTU-1	PACKAGED VAV ROOFTOP UNIT	ROOF	JOB CENTER	RN-030-8-0-BA02-344	3300	2	5,033	0.4	AXIAL	1327	0.89	1	10,500	3.37	1.45	PLENUM	1412	8.44	1575	YES	2", 30% EFFICIENCY	326	275	78	55	-	R-410A	4	14	270	218	-15F	2.0 x 2 FANS	15.0	193	208	3	1,2,3,4,5,6
RTU-2	PACKAGED VAV ROOFTOP UNIT	ROOF	JOB CENTER	RN-031-8-0-BA02-3C4	6200	1	12,500	0.4	AXIAL	1062	1.98	2	6,250	2.35	1.45	PLENUM	1323	3.54	1875	YES	2", 30% EFFICIENCY	370	316	78	55	-	R-410A	4	14	540	432	-15F	3.0	5.0 x 2 FANS	172	208	3	1,2,3,4,5,6
RTU-3	PACKAGED VAV ROOFTOP UNIT	ROOF	JOB CENTER	RN-030-8-0-BA02-344	3300	2	4,763	0.5	AXIAL	1400	0.92	1	10,500	3.63	1.75	PLENUM	1440	9.01	1575	YES	2", 30% EFFICIENCY	326	275	78	55	-	R-410A	4	14	270	218	-15F	2.0 x 2 FANS	15.0	193	208	3	1,2,3,4,5,6
RTU-4	PACKAGED VAV ROOFTOP UNIT	ROOF	JOB CENTER	RN-050-8-0-BA04-3C4	6800	1	14,450	0.5	AXIAL	1470	2.43	2	8,500	2.66	1.65	PLENUM	1610	6.17	2550	YES	2", 30% EFFICIENCY	589	470	78	55	-	R-410A	4	14	540	432	-15F	3.0	7.5 x 2 FANS	296	208	3	1,2,3,4,5,6
RTU-5	PACKAGED VAV ROOFTOP UNIT	ROOF	JOB CENTER	RN-030-8-0-BA02-344	3300	2	5,250	0.5	AXIAL	1414	1.09	1	10,500	3.70	1.75	PLENUM	1448	9.17	1575	YES	2", 30% EFFICIENCY	326	275	78	55	-	R-410A	4	14	270	218	-15F	2.0 x 2 FANS	15.0	193	208	3	1,2,3,4,5,6
RTU-6	PACKAGED VAV ROOFTOP UNIT	ROOF	NIP	RN-020-8-0-BA02-344	3200	1	7000	0.4	AXIAL	1651	1.63	1	8000	2.58	1.45	PLENUM	1164	4.80	1200	YES	2", 30% EFFICIENCY	236	204	78	55	-	R-410A	4	14	270	218	-15F	2.0	7.5	110	208	3	1,2,3,4,5,6
RTU-7	PACKAGED VAV ROOFTOP UNIT	ROOF	NIP	RN-025-8-0-BA02-344	3200	1	7775	0.4	AXIAL	1637	2.03	1	8000	2.68	1.45	PLENUM	1179	4.97	1200	YES	2", 30% EFFICIENCY	287	226	78	55	-	R-410A	4	14	270	218	-15F	3.0	7.5	159	208	3	1,2,3,4,5,6

NOTES:
1. THE OUTSIDE AIR QUANTITY SHALL REMAIN CONSTANT AS THE SUPPLY FAN'S VOLUME VARIES, FURNISH AIRFLOW MEASURING CONTROL OA DAMPERS.
2. DESIGN INTENT BASED ON AAON
3. UNIT MANUFACTURER TO PROVIDE VFDs FOR SUPPLY AND RETURN FANS, FACTORY INSTALLED.
4. MAX FACE VELOCITY ON COOLING COIL SHALL BE NO GREATER THAN 500 FPM.
5. PROVIDE UNIT WITH ELECTRICAL SERVICE OUTLET.
6. COOLING CAPACITY BASED ON 95°F AMBIENT AIR TEMPERATURE
7. ECONOMIZER CONTROL TO BE PROVIDED
8. PROVIDE W/ 18" HIGH FACTORY ROOF CURB.

CONVECTOR SCHEDULE

MARK	DESCRIPTION	TYPE	EWT/LWT (°F)	FLOW RATE (GPM)	SIZE IN INCHES			CAPACITY (MBH)	REMARKS
					LENGTH	HEIGHT	DEPTH		
CONV-1	HOT WATER CONVECTOR	TRANE SFK	180 / 160	0.61	44	32	6	6.1	1, 2
CONV-2	HOT WATER CONVECTOR	TRANE SFK	180 / 160	0.61	44	32	6	6.1	1, 2
CONV-3	HOT WATER CONVECTOR	TRANE SFK	180 / 160	0.61	44	32	6	6.1	1, 2
CONV-4	HOT WATER CONVECTOR	TRANE SFK	180 / 160	0.61	44	32	6	6.1	1, 2
CONV-5	HOT WATER CONVECTOR	TRANE SFK	180 / 160	0.61	44	32	6	6.1	1, 2

NOTES:
1. PROVIDE END POCKETS AND ACCESS DOOR FOR VALVES & CONTROLS AS REQUIRED FOR SERVICE.
2. AIR VENT VALVE SHALL BE EXTENDED NEAR THE ACCESS DOOR.

HOT WATER RADIANT CEILING PANEL

MARK	MANUFACTURER	MODEL NO.	PANEL SIZE	NO. OF PASSES	AWT °F	CAPACITY (MBH)	REMARKS
RCP-1	STERLING	MODULAR	2'x4'	6	170	1.48	1

REMARKS:
1. INSTALL UNITS PER UNIT MANUFACTURERS WRITTEN INSTRUCTIONS. COORDINATE THE RADIANT CEILING PANEL WITH THE CEILING TYPE (T-BAR OR SURFACE MOUNT) IN FIELD PRIOR TO ORDERING.

CABINET UNIT HEATERS

MARK	DESCRIPTION	LOCATION	BASED ON MODEL	AIR FLOW PATTERN	DIMENSION LxHxD IN INCHES	CFM	FLOW RATE GPM	WATER PD IN FEET	ROWS	CAPACITY (MBH)	EWT / LWT	MOTOR				REMARKS
												AMPS	RPM	VOLTS	PHASE	
CUH-1	CEILING HUNG EXPOSED	VESTIBULE J063	TRANE FORCE FLO MODEL D, SIZE 12	HORZ.	70x27x10	976	5.6	9.0	3	84.3	180 / 150	1.7	1080	120	1	1, 2, 3, 4
CUH-2	CEILING HUNG EXPOSED	VESTIBULE J001	TRANE FORCE FLO MODEL D, SIZE 12	HORZ.	70x27x10	976	5.6	9.0	3	84.3	180 / 150	1.7	1080	120	1	1, 2, 3, 4
CUH-3	CEILING HUNG EXPOSED	VESTIBULE 122A	TRANE FORCE FLO MODEL D, SIZE 12	HORZ.	70x27x10	976	5.6	9.0	3	84.3	180 / 150	1.7	1080	120	1	1, 2, 3, 4
CUH-4	WALL HUNG	CORRIDOR J111	TRANE, FORCE FLO MODEL M, SIZE 08	VERTICAL, INVERTED	56X29X10.5	706	3.2	3.4	2	47	180 / 150	1.4	1080	115	1	1, 2, 5
CUH-5	WALL HUNG	CORRIDOR J117	TRANE, FORCE FLO MODEL M, SIZE 08	VERTICAL, INVERTED	56X29X10.5	706	3.2	3.4	2	47	180 / 150	1.4	1080	115	1	1, 2, 5

NOTES:
1. SELECTIONS BASED ON ENTERING AIR TEMPERATURE 70°F.
2. PROVIDE 1" FILTER.
3. CEILING HUNG UNITS SHALL BE INSTALLED WITH VIBRATION ISOLATORS AND FLEXIBLE CONNECTIONS.
4. PROVIDE BACK STAMPED LOUVER INLET AND BOTTOM STAMPED LOUVER OUTLET.
5. PROVIDE FRONT STAMPED LOUVER INLET AND OUTLETS FOR INVERTED AIRLFOW MODEL M.

FAN SCHEDULE

MARK	LOCATION	SERVES	DESCRIPTION MODEL #	FAN DATA						FAN PERFORMANCE			MOTOR DATA				REMARKS
				DRIVE TYPE	FAN TYPE AF, BI, FC	WHEEL DIAMETER (IN.)	OUTLET VELOCITY (FPM)	TIP SPEED (FPM)	FAN DISCHARGE UB, TH, AD	CFM	STATIC PRESSURE	RPM	BHP	HP	VOLTS	PHASE	
PRV-1	NIP	WEST TOILETS	CARNES VEBK 08	BELT	BI	-	-	-	DOWNBLAST	675	.25	1450	.10	.17	120	1	1
PRV-2	JOB CENTER	LUNCHROOM	CARNES VEBK 15	BELT	BI	-	-	-	DOWNBLAST	2160	.25	1050	.32	.50	120	1	1
PRV-3	JOB CENTER	SOUTH TOILETS	CARNES VEBK 08	BELT	BI	-	-	-	DOWNBLAST	825	.25	1700	.16	.25	120	1	1

NOTES:
1. INTEGRAL DISCONNECT REQUIRED

STRANG

ARCHITECTURE
ENGINEERING
INTERIOR DESIGN

STRANG INC.
6411 MINERAL POINT ROAD
MADISON, WI 53705-4395

T/ 608 276 9200
F/ 608 276 9204

Henneman Engineering Inc.
Madison:
1232 Fourier Drive, Suite 101
Madison, Wisconsin 53717-1960
T 608.833.7000 F 608.833.6996
Email: info@henneman.com
Website: http://www.henneman.com

© 2009 Henneman Engineering Inc. / S. reg. #184-000245
(001-013373) (063-036272)

JOB NO. 07-5780

ISSUED FOR:
CONSTRUCTION
INTERIOR REMODEL
01-29-09

DRAWING SET CD
COPYRIGHT STRANG, INC. 2009
FILE NAME M501
REVISIONS

DRAWN KSO
CHECKED CCL
DATE 01-29-09
PROJECT NO. 2007070

PROJECT TITLE
DANE COUNTY
JOB CENTER
INTERIOR REMODEL
BID #109001

1819 ABERG AVENUE
MADISON, WISCONSIN

SHEET TITLE
HVAC
SCHEDULES

SHEET NO.
M501

NOTES:

1. INLET DUCTWORK TO BE INLET SIZE UNLESS NOTED OTHERWISE ON PLANS. EAT TO BE 55F.

2. MAXIMUM NOISE LEVEL 25 NC. @ 1.0" W.G. DIFFERENTIAL STATIC PRESSURE @ DISCHARGE. MAX CFM INDICATED IS BASED ON MAXIMUM OF 75% OF THE NOMINAL BOX CAPACITY. LEAVING AIR TEMPERATURE (LAT) SHALL NOT EXCEED 115F UNLESS SCHEDULED AS SUCH. A 3'-0" MAX COIL WPD IS ACCEPTABLE. COILS TO BE SELECTED ON 180 EWT/160 LWT. NORMALLY OPEN CONTROL DAMPER POSITION COORDINATE WITH CONTROL CONTRACTOR. BOX STATIC PRESSURE INCLUDES BOX AND COIL.

3. BOX SELECTION IS BASED ON TRANE.

4. PROVIDE 1 ROW 36" X 24" BOOSTER COIL DOWNSTREAM OF VAV BOX TO MEET HEATING LOAD AND PRESSURE DROP REQUIREMENTS AS SCHEDULED.

SINGLE DUCT VARIABLE & CONSTANT VOLUME TERMINAL UNIT SCHEDULE

MARK	SERVED BY	MAX CFM	MIN CFM	DUCT INLET DIA (IN)	BOX STATIC PRESSURE (IN WG)	REHEAT COIL							NOTES
						CAPACITY (MBH)	HEATING CFM	WATER GPM	ROWS	WATER PRESSURE DROP (FT. WG) MAX.	LAT	EWT/LWT (DEG F)	
1	RTU-1	4240	1280	24x16	0.3 MAX	69.1	SEE MIN CFM	6.9	SEE NOTE 4	3.0	105	180/VARIES	1, 2, 3, 4
2	RTU-1	530	160	8	0.05	7.8	SEE MIN CFM	0.8	1	0.9	100	180/VARIES	1, 2, 3
3	RTU-1	960	290	10	0.40	17.2	SEE MIN CFM	1.7	2	0.7	110	180/VARIES	1, 2, 3
4	RTU-1	880	350	10	0.35	20.8	SEE MIN CFM	2.1	2	0.7	110	180/VARIES	1, 2, 3
5	RTU-1	960	400	10	0.40	23.8	SEE MIN CFM	2.4	2	0.7	110	180/VARIES	1, 2, 3
6	RTU-1	800	250	10	0.26	16.2	SEE MIN CFM	1.6	2	0.7	115	180/VARIES	1, 2, 3
7	RTU-1	230	70	5	0.07	3.0	SEE MIN CFM	0.5	1	0.6	95	180/VARIES	1, 2, 3
8	RTU-1	1140	450	12	0.35	26.7	SEE MIN CFM	2.7	2	0.5	110	180/VARIES	1, 2, 3
9	RTU-1	460	140	8	0.15	7.6	SEE MIN CFM	0.8	1	0.9	105	180/VARIES	1, 2, 3
10	RTU-1	300	90	6	0.20	4.4	SEE MIN CFM	0.5	1	0.6	100	180/VARIES	1, 2, 3
11	RTU-2	4235	1280	24x16	0.3 MAX	62.2	SEE MIN CFM	6.2	SEE NOTE 4	3.0	100	180/VARIES	1, 2, 3, 4
12	RTU-2	365	130	6	0.25	7.7	SEE MIN CFM	0.8	1	1.9	110	180/VARIES	1, 2, 3
13	RTU-2	3150	1000	24x16	0.30	46.2	SEE MIN CFM	4.0	1	5.5	100	180/VARIES	1, 2, 3
14	RTU-2	570	250	8	0.34	14.9	SEE MIN CFM	1.5	2	0.4	110	180/VARIES	1, 2, 3
15	RTU-2	2800	900	16	0.20	45.4	SEE MIN CFM	4.0	1	5.0	105	180/VARIES	1, 2, 3
16	RTU-2	220	70	5	0.06	3.4	SEE MIN CFM	0.5	1	0.6	100	180/VARIES	1, 2, 3
17	RTU-2	420	130	8	0.20	6.3	SEE MIN CFM	1.6	2	0.4	100	180/VARIES	1, 2, 3
18	RTU-2	350	110	6	0.32	7.1	SEE MIN CFM	0.7	2	1.2	115	180/VARIES	1, 2, 3
19	RTU-2	390	120	8	0.10	5.8	SEE MIN CFM	0.6	1	0.9	100	180/VARIES	1, 2, 3
20	RTU-3	3800	1140	24x16	0.3 MAX	55.4	SEE MIN CFM	5.5	SEE NOTE 4	3.0	100	180/VARIES	1, 2, 3, 4
21	RTU-3	400	120	8	0.17	7.8	SEE MIN CFM	0.8	2	0.4	115	180/VARIES	1, 2, 3
22	RTU-3	1260	380	12	0.35	32.8	SEE MIN CFM	3.3	2	1.5	110	180/VARIES	1, 2, 3
23	RTU-3	200	60	5	0.05	2.9	SEE MIN CFM	0.5	1	0.6	100	180/VARIES	1, 2, 3
24	RTU-3	675	210	8	0.25	10.2	SEE MIN CFM	1.0	1	2.9	100	180/VARIES	1, 2, 3
25	RTU-3	510	225	8	0.25	13.4	SEE MIN CFM	1.3	2	0.4	110	180/VARIES	1, 2, 3
26	RTU-3	510	160	8	0.17	7.8	SEE MIN CFM	0.8	1	0.9	100	180/VARIES	1, 2, 3
27	RTU-3	460	140	8	0.15	6.8	SEE MIN CFM	0.7	1	0.9	100	180/VARIES	1, 2, 3
28	RTU-3	715	220	10	0.15	10.7	SEE MIN CFM	1.1	1	4.0	100	180/VARIES	1, 2, 3
29	RTU-3	890	270	10	0.17	11.7	SEE MIN CFM	1.2	1	4.0	95	180/VARIES	1, 2, 3
30	RTU-3	480	150	8	0.16	7.3	SEE MIN CFM	0.7	1	1.0	100	180/VARIES	1, 2, 3
31	RTU-3	600	180	8	0.20	8.7	SEE MIN CFM	0.9	1	2.8	100	180/VARIES	1, 2, 3
32	RTU-4	5905	1780	24x16	0.5 MAX	96.1	SEE MIN CFM	9.6	SEE NOTE 4	3.0	105	180/VARIES	1, 2, 3, 4
33	RTU-4	2510	900	16	0.16	41.0	SEE MIN CFM	4.0	1	5.0	105	180/VARIES	1, 2, 3
34	RTU-4	300	90	6	0.20	3.9	SEE MIN CFM	0.5	1	0.6	95	180/VARIES	1, 2, 3
35	RTU-4	770	320	10	0.25	19.0	SEE MIN CFM	1.9	2	0.7	110	180/VARIES	1, 2, 3
36	RTU-4	2550	900	1	0.20	41.6	SEE MIN CFM	4.0	1	5.0	105	180/VARIES	1, 2, 3
37	RTU-4	1320	400	12	0.20	19.4	SEE MIN CFM	1.9	1	2.5	100	180/VARIES	1, 2, 3
38	RTU-4	270	180	6	0.15	8.7	SEE MIN CFM	0.9	1	1.8	100	180/VARIES	1, 2, 3
39	RTU-4	475	150	8	0.15	6.5	SEE MIN CFM	0.7	1	1.5	95	180/VARIES	1, 2, 3
40	RTU-4	2100	630	14	0.18	34.0	SEE MIN CFM	3.4	1	3.7	105	180/VARIES	1, 2, 3
41	RTU-4	300	90	6	0.17	4.4	SEE MIN CFM	0.5	1	0.6	100	180/VARIES	1, 2, 3
42	RTU-5	1030	310	10	0.40	16.7	SEE MIN CFM	1.7	2	0.7	95	180/VARIES	1, 2, 3
43	RTU-5	1770	540	14	0.14	35.0	SEE MIN CFM	3.5	1	3.7	115	180/VARIES	1, 2, 3
44	RTU-5	810	250	10	0.15	10.8	SEE MIN CFM	1.1	1	4.0	95	180/VARIES	1, 2, 3
45	RTU-5	2750	900	16	0.20	40.3	SEE MIN CFM	4.0	1	5.0	100	180/VARIES	1, 2, 3
46	RTU-5	780	240	10	0.14	10.4	SEE MIN CFM	1.0	1	3.9	95	180/VARIES	1, 2, 3
47	RTU-5	680	210	10	0.12	10.2	SEE MIN CFM	1.0	1	3.9	100	180/VARIES	1, 2, 3
48	RTU-5	380	120	8	0.10	5.8	SEE MIN CFM	0.6	1	0.9	100	180/VARIES	1, 2, 3
49	RTU-5	380	120	8	0.10	5.8	SEE MIN CFM	0.6	1	0.9	100	180/VARIES	1, 2, 3
50	RTU-5	1070	330	12	0.15	21.4	SEE MIN CFM	2.1	2	0.3	115	180/VARIES	1, 2, 3
51	RTU-5	380	120	8	0.10	5.8	SEE MIN CFM	0.6	1	0.9	100	180/VARIES	1, 2, 3
52	RTU-5	560	170	8	0.32	10.1	SEE MIN CFM	1.0	2	0.3	110	180/VARIES	1, 2, 3
53	RTU-6	1050	450	10	0.40	26.7	SEE MIN CFM	2.7	2	2.0	110	180/VARIES	1, 2, 3
54	RTU-6	880	350	10	0.30	20.8	SEE MIN CFM	2.1	2	0.8	110	180/VARIES	1, 2, 3
55	RTU-6	740	230	10	0.25	13.7	SEE MIN CFM	1.4	2	0.7	110	180/VARIES	1, 2, 3
56	RTU-6	900	270	10	0.18	11.7	SEE MIN CFM	1.2	1	4.0	95	180/VARIES	1, 2, 3
57	RTU-6	900	270	10	0.18	11.7	SEE MIN CFM	1.2	1	4.0	95	180/VARIES	1, 2, 3
58	RTU-6	700	210	10	0.14	10.2	SEE MIN CFM	1.0	1	3.9	100	180/VARIES	1, 2, 3
59	RTU-6	320	100	6	0.20	4.9	SEE MIN CFM	0.5	1	0.6	100	180/VARIES	1, 2, 3
60	RTU-6	860	260	10	0.30	16.8	SEE MIN CFM	1.7	2	0.7	115	180/VARIES	1, 2, 3
61	RTU-6	700	210	10	0.14	10.2	SEE MIN CFM	1.0	1	3.9	100	180/VARIES	1, 2, 3
62	RTU-6	950	290	10	0.35	17.2	SEE MIN CFM	1.7	2	0.7	110	180/VARIES	1, 2, 3
63	RTU-7	1200	360	12	0.35	19.4	SEE MIN CFM	1.9	2	0.3	105	180/VARIES	1, 2, 3
64	RTU-7	815	250	10	0.26	13.5	SEE MIN CFM	1.7	2	0.7	105	180/VARIES	1, 2, 3
65	RTU-7	300	120	6	0.28	6.5	SEE MIN CFM	0.7	2	2.0	105	180/VARIES	1, 2, 3
66	RTU-7	800	240	10	0.26	14.3	SEE MIN CFM	1.4	2	0.7	110	180/VARIES	1, 2, 3
67	RTU-7	500	150	8	0.16	8.1	SEE MIN CFM	0.8	1	2.5	105	180/VARIES	1, 2, 3
68	RTU-7	220	70	5	0.06	3.0	SEE MIN CFM	0.5	1	0.6	95	180/VARIES	1, 2, 3
69	RTU-7	940	290	10	0.35	18.8	SEE MIN CFM	1.9	2	0.7	115	180/VARIES	1, 2, 3
70	RTU-7	660	200	8	0.23	9.7	SEE MIN CFM	1.0	1	2.9	100	180/VARIES	1, 2, 3
71	RTU-7	360	150	6	0.33	8.9	SEE MIN CFM	0.9	2	0.3	110	180/VARIES	1, 2, 3
72	RTU-7	1750	530	14	0.31	22.9	SEE MIN CFM	2.3	2	0.5	95	180/VARIES	1, 2, 3
73	RTU-7	455	140	8	0.13	6.8	SEE MIN CFM	0.7	1	1.5	100	180/VARIES	1, 2, 3
74	RTU-4	250	80	5	0.07	4.3	SEE MIN CFM	0.5	1	0.6	105	180/VARIES	1, 2, 3

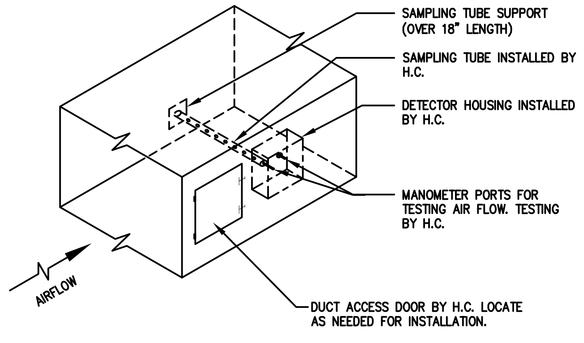

Installation Requirements
In addition to the manufacturer's instructions the following guidelines will be enforced:

A. Duct detector may be installed in any wall of the duct unless otherwise restricted by the manufacturers instructions.

B. Cut inlet sampling tube to suit dimension of duct. Provide sampling tube mounting support.

C. Contractor to note that air inlet sampling tubes are designed for differing duct widths employing air inlet holes in a quantity matching the duct width. Verify each inlet tube is appropriately sized for the duct width (typically 10 to 12 holes, each 0.193" diameter holes [#11 drill bit]).

D. Angle cut return tube at a length as recommend by manufacturer if required. Support in accordance with manufacturers recommendations

E. Position inlet holes facing upstream of airflow. This initial installation position shall be used as the starting point for differential pressure testing. If required adjust as stated in the testing/adjusting procedure above. angle cut of return tube shall be orientated downstream of air flow.

F. Once acceptable differential pressure readings are obtained, tubes shall be locked in place in accordance with the manufacturers installation instructions.

G. Duct detector assembly and sampling tubes shall be mounted rigidly to prevent noise, chatter and mechanical fatigue. Any installation found unacceptable will be corrected at the installing contractors expense.

H. Air leaks are unacceptable, this installing contractor shall provide gaskets, or duct sealant around inlet and outlet air tubes. Sealing around detector housing perimeter is not acceptable.

I. Once the detector is installed, verify correct differential pressure readings across sampling tubes and record. Install manufacturer furnished sampling tube filters.

J. If duct is insulated, provide detector standoffs equivalent in depth of the duct wall insulation to rigidly support detector assembly. Seal any air holes that are not inside duct wall with duct sealant and tape.

K. At each duct detector installation location provide a service opening. Include a minimum 12" x 12" access door as specified in division 15.

After assembly is installed and tested, coordinate with division 16 contractor for smoke detector installation.

A / M502 SMOKE DETECTOR INSTALLATION DETAIL
NO SCALE

STRANG

ARCHITECTURE
ENGINEERING
INTERIOR DESIGN

STRANG INC.
6411 MINERAL POINT ROAD
MADISON, WI 53705-4395

T/ 608 276 9200
F/ 608 276 9204

Henneman Engineering Inc.
Madison:
1232 Fourier Drive, Suite 101
Madison, Wisconsin 53717-1960
T 608.833.7000 F 608.833.6996
Email: info@henneman.com
Website: http://www.henneman.com
© 2009 Henneman Engineering Inc. / S, reg. #184-000246
(001-013373) (063-036372)
JOB NO. 07-5780

ISSUED FOR:
CONSTRUCTION
INTERIOR REMODEL
01-29-09

DRAWING SET	CD
COPYRIGHT STRANG, INC.	2009
FILE NAME	M502
REVISIONS	
DRAWN	KSO
CHECKED	CCL
DATE	01-29-09
PROJECT NO.	2007070

PROJECT TITLE

DANE COUNTY
JOB CENTER
INTERIOR REMODEL
BID #109001

1819 ABERG AVENUE
MADISON, WISCONSIN

SHEET TITLE

HVAC
SCHEDULES

SHEET NO.
M502

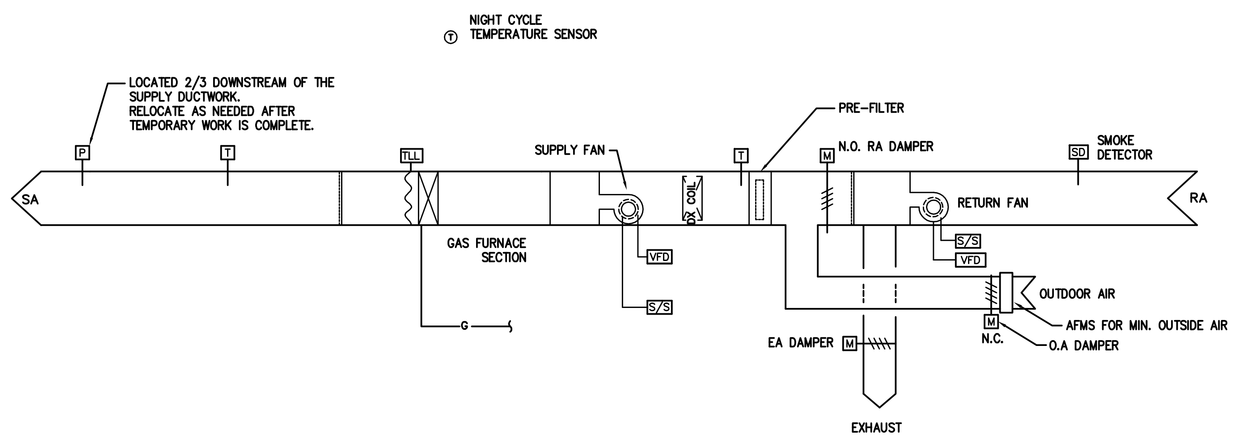

ROOFTOP UNIT CONTROL (TYPICAL ALL UNITS)

SEQUENCE OF OPERATION:

RTU CONTROL SEQUENCE (typical all units):

ALL CONTROLS ARE PROVIDED AND INSTALLED BY THE TEMPERATURE CONTROL CONTRACTOR UNLESS INDICATED OTHERWISE.

THE ROOFTOP UNIT CONTROLLER IS A MICROPROCESSOR BASED DIRECT DIGITAL CONTROLLER.

ALL CONTROLS SHALL BE PERFORMED BY UNIT CONTOLLER WITH ELECTRIC ACTUATION, UNLESS NOTED OTHERWISE.

ALL CONTROL DAMPERS ARE PROVIDED WITH ELECTRIC OPERATORS AND LINKAGES, UNLESS NOTED OTHERWISE. WHENEVER FANS ARE OFF, RELATED CONTROL AIR DAMPERS SHALL MOVE TO FAIL POSITIONS.

ALL TEMPERATURE CONTROL VALVES ARE PROVIDED WITH ELECTRIC OPERATORS, UNLESS NOTED OTHERWISE.

EXHAUST AIR, OUTSIDE AIR, AND RETURN AIR DAMPERS AND DAMPER OPERATORS ARE PROVIDED WITH THE RTU.

AHU OPERATION: INTERLOCK OPERATION OF SUPPLY AND RETURN FANS THROUGH SOFTWARE INTERLOCK. RESTART FANS AUTOMATICALLY AFTER A POWER OUTAGE.

ECONOMIZER: UTILIZE OUTSIDE AIR IN COMBINATION WITH RETURN AIR TO MINIMIZE ENERGY REQUIRED FOR COOLING AND DEHUMIDIFYING AS MONITORED BY MIXED AIR TEMPERATURE SENSOR.

MINIMUM OUTSIDE AIR: WHEN SUPPLY FAN IS ON, MINIMUM OA, RA, AND EA MIXING DAMPERS SHALL BE POSITIONED TO FURNISH THE SCHEDULED OUTSIDE AIR QUANTITY. MINIMUM FRESH AIR FLOW MONITORS TO ADJUST MINIMUM POSITION AUTO DAMPERS TO BRING MINIMUM SET AIR.

LOW LIMIT PROTECTION: ELECTRIC THERMOSTAT WITH SENSING ELEMENT ON DISCHARGE OF FURNACE SHALL INDICATE AN ALARM THROUGH THE UNIT CONTROLLER, SHUTDOWN THE SUPPLY AND RETURN FANS, AND MOVE ALL ASSOCIATED CONTROL DAMPERS AND TCV'S TO FAIL POSITIONS WHENEVER AIR DOWNSTREAM OF PREHEAT COIL FALLS BELOW 38 DEGREES F (ADJ).

RTU SYSTEM SMOKE CONTROL: ELECTRONIC SMOKE DETECTORS PROVIDED AND WIRED BY E.C. BUT INSTALLED & TESTED BY MECHANICAL CONTRACTOR IN THE RTU RETURN DUCT SHALL SENSE SMOKE IN AIRSTREAM AND SEND ALARM TO FIRE ALARM SYSTEM (BY E.C.). FIRE ALARM SYSTEM SHALL PROVIDE ALARM SIGNAL TO SHUT DOWN RTU COMPLETELY.

NATURAL GAS FURNACE: 4-TO-1 MODULATION OF GAS BURNER TO MAINTAIN SUPPLY AIR TEMPERTURE SETPOINT OF 54°F (ADJ.).

COOLING MODE WITH DIGITAL SCROLL COMPRESSOR: MULTIPLE STAGES OF COOLING CAN BE CONFIGURED SUBJECT TO USER ADJUSTABLE MINIMUM RUN TIMES, MINIMUM OFF TIMES, STAGING UP AND STAGING DOWN DELAYS. COOLING IS ENABLED WHEN THE TEMPERATURE AT THE MODE ENABLE SENSOR RISES ONE DEADBAND ABOVE THE COOLING SETPOINT (55°F ADJ.). COOLING IS DISABLED WHEN THE MODE ENABLE TEMPERATURE FALLS ONE DEADBAND BELOW THE COOLING SETPOINT. THE SETPOINT AND DEADBAND ARE USER ADJUSTABLE. ONCE IN THE COOLING MODE THE UNIT WILL MAINTAIN THE SUPPLY AIR TEMPERATURE AT THE ACTIVE SUPPLY AIR COOLING SETPOINT BY MODULATING A DIGITAL COMPRESSOR (1.5 - 5.0 VDC OPERATION). A COOLING RELAY MUST BE CONFIGURED. IF ADDITIONAL COOLING IS REQUIRED, FIXED COMPRESSOR STAGES CAN BE STAGED ON WHILE THE DIGITAL COMPRESSOR CONTINUES TO MODULATE. TO STAGE UP THE EXTRA COMPRESSORS, THE SUPPLY TEMPERATURE NEEDS TO BE ABOVE THE ACTIVE SUPPLY AIR SETPOINT AND THE DIGITAL COMPRESSOR NEEDS TO BE ABOVE 100% FOR A PERIOD OF TIME EQUAL TO THE STAGE UP DELAY. TO STAGE DOWN THE EXTRA COMPRESSORS, THE SUPPLY TEMPERATURE NEEDS TO BE BELOW THE ACTIVE SUPPLY AIR SETPOINT AND THE DIGITAL COMPRESSOR NEEDS TO BE AT 0% FOR A PERIOD OF TIME EQUAL TO THE STAGING DOWN DELAY.

SUPPLY FAN: MAINTAIN CONSTANT STATIC PRESSURE IN THE SYSTEM BY MODULATING SUPPLY FAN SPEED THROUGH VFD. PROVIDE STATIC PRESSURE SENSOR IN THE DISTRIBUTION DUCTWORK AT 2/3RD THE DISTANCE TO THE END OF THE SUPPLY DUCT TO MAINTAIN SET STATIC PRESSURE OF 0.65 IN WG (ADJUSTABLE). STATIC PRESSURE SENSOR SHALL BE INSTALLED AND WIRED TO THE RTU CONTROLLER, IN THE FIELD. UPON SHUTDOWN OR START-UP, VFD SHALL LOAD OR UNLOAD FAN OVER A ONE MINUTE INTERVAL.

RETURN FAN: MAINTAIN CONSTANT SUPPLY/RETURN AIR VOLUME OFFSET BY MODULATING RETURN FAN VFD SPEED IN PROPORTION TO SUPPLY FAN VFD SPEED.

NIGHT CYCLE: OA DAMPER MINIMUM POSITION IS RESET TO FULLY CLOSED AND ALL EXHAUST FANS TO BE DEENERGIZED. UNIT CONTROLLER SHALL PROVIDE OUTPUT SIGNAL TO VAV TERMINAL UNITS TO INITIATE NIGHT CYCLE OPERATION. DEDICATED NIGHT CYCLE TEMPERATURE SENSOR SHALL CAUSE THE RTU TO CYCLE ON TO MAINTAIN NIGHT CYCLE HEATING AND COOLING TEMPERATURE SETPOINTS. WHEN ENERGIZED FOR HEAT, THE GAS FURNACE SHALL COME FULLY ON. WHEN ENERGIZED FOR COOLING, THE RTU DISCHARGE TEMPERATURE SHALL BE MAINTAINED AT THE OCCUPIED MODE SETPONT. WHEN THE SPACE TEMPERATURE SENSOR IS SATISFIED, RTU SHALL BE CYCLED OFF. NIGHT CYCLE SPACE TEMPERATURE HEATING SETPOINT SHALL BE 60°F. COOLING SETPOINT SHALL BE 80°F.

MORNING WARM-UP OR COOL-DOWN CYCLES SHALL BE INITIATED PRIOR TO SCHEDULED OCCUPIED MODE START TIME. THE UNIT SHALL OPERATE THE SAME AS DESCRIBED FOR NIGHT CYCLE OPERATION, EXCEPT THE SPACE TEMPERATURE SETPONTS SHALL BE RESET TO 72°F FOR HEATING AND 74°F FOR COOLING.

ALL SYSTEMS RESUME OCCUPIED MODE 1 HOUR PRIOR TO SCHEDULED OCCUPANCY TIME.

DDC INPUT/OUTPUT SUMMARY TABLE

BUILDING: DANE COUNTY JOB CENTER	HARDWARE																						SOFTWARE											
	OUTPUT								INPUT										ALARM				APPLICATION PROGRAMS											
	DIGITAL				ANALOG				DIGITAL			ANALOG							DGTL	ANALOG														
SYSTEM: VAV BOX WITH REHEAT AND WALL FIN (TYP. OF EACH UNIT)	START/STOP	ENABLE/DISABLE	OPEN/CLOSE	HAND/OFF/AUTO	STATUS LIGHT	CONTROL	SET PT. ADJUSTMENT	POSITION	STATUS	STATUS LIGHT	END SWITCH	TEMPERATURE	PRESSURE	FLOW	HUMIDITY	DIFF. PRESSURE	MANUAL OVERDRIVE	EQUIPMENT ALARM	HIGH LIMIT	LOW LIMIT	HIGH LIMIT	LOW LIMIT	RUN TIME	SCHEDULED S/ST	OPTIMAL S/ST	DUTY CYCLING	DEMAND LIMITING	NIGHT SETBACK	ECONOMIZER	CFM CONTROL	COLD DECK RESET	HOT DECK RESET	HOT WATER RESET	COND. WATER RESET	CHILLER SEQUENCING	SMOKE CONTROL	
OCCUPIED TIME: (PROGRAMMABLE OR 24 HOURS / DAY)																																		
POINT DESCRIPTION																																		REMARKS
VAV DAMPER								X																										
REHEAT COIL VALVE								X																										
ROOM TEMPERATURE												X																						
SUPPLY AIR CFM													X																					
WALL FIN TCV								X																										NOTE 1
SUPPLY AIR TEMPERATURE												X																						
THERMOSTAT SET POINT												X																						

NOTES:
1. REFER TO FLOORPLANS FOR LOCATIONS WHERE VAV CONTROLLER ALSO CONTROLS WALL FIN.

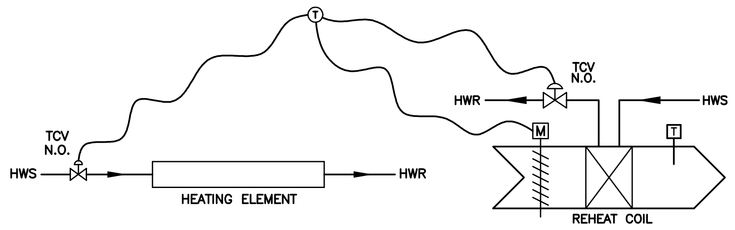

RADIANT CEILING PANEL

VAV BOX W/REHEAT

A M601 VAV BOX W/ REHEAT AND RADIANT PANEL CONTROL

NO SCALE

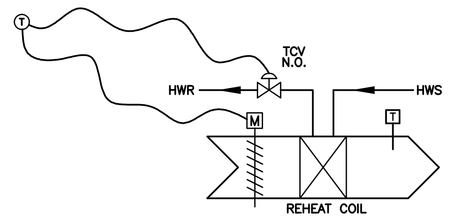

VARIABLE AIR VOLUME BOX WITH REHEAT

DDC INPUT/OUTPUT SUMMARY TABLE

BUILDING: DANE COUNTY JOB CENTER	HARDWARE																						SOFTWARE											
	OUTPUT								INPUT										ALARM				APPLICATION PROGRAMS											
	DIGITAL				ANALOG				DIGITAL			ANALOG							DGTL	ANALOG														
SYSTEM: VAV AND CV TERMINAL UNIT, WITH REHEAT (TYP. OF EACH UNIT)	START/STOP	ENABLE/DISABLE	OPEN/CLOSE	HAND/OFF/AUTO	STATUS LIGHT	CONTROL	SET PT. ADJUSTMENT	POSITION	STATUS	STATUS LIGHT	END SWITCH	TEMPERATURE	PRESSURE	FLOW	HUMIDITY	DIFF. PRESSURE	MANUAL OVERDRIVE	EQUIPMENT ALARM	HIGH LIMIT	LOW LIMIT	HIGH LIMIT	LOW LIMIT	RUN TIME	SCHEDULED S/ST	OPTIMAL S/ST	DUTY CYCLING	DEMAND LIMITING	NIGHT SETBACK	ECONOMIZER	CFM CONTROL	COLD DECK RESET	HOT DECK RESET	HOT WATER RESET	COND. WATER RESET	CHILLER SEQUENCING	SMOKE CONTROL	
OCCUPIED TIME: (PROGRAMMABLE OR 24 HOURS / DAY)																																		
POINT DESCRIPTION																																		REMARKS
VAV DAMPER								X																										
REHEAT COIL VALVE								X																										
ROOM TEMPERATURE												X																						
SUPPLY AIR CFM													X																					
SUPPLY AIR TEMPERATURE												X																						
THERMOSTAT SET POINT												X																						

B M601 VARIABLE AIR VOLUME BOX W/ REHEAT CONTROL

NO SCALE

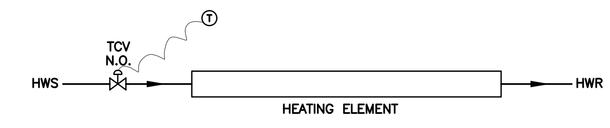

CONTROL SEQUENCE:

SINGLE TEMPERATURE LOW VOLTAGE ELECTRIC THERMOSTAT, LOCATED IN ROOM SERVED, SET AT 75°F (ADJ), MAINTAINS CONSTANT TEMPERATURE BY THE MODULATING THE ELECTRIC TCV. PROVIDE STEP-DOWN CONTROL TRANSFORMER ABOVE CEILING TO POWER CONTROL DEVICES. LINE VOLTAGE POWER TO CONTROL TRANSFORMER BY EC.

E M601 HOT WATER RADIANT CEILING PANEL CONTROL

NO SCALE

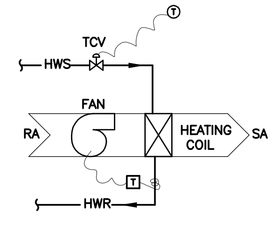

CONTROL SEQUENCE:

SINGLE TEMPERATURE LOW VOLTAGE ELECTRIC THERMOSTAT, LOCATED IN ROOM SERVED, SET AT 70°F (ADJ.), MAINTAINS CONSTANT TEMPERATURE BY ACTUATING TWO-WAY, TWO-POSITION LOW VOLTAGE ELECTRIC TCV. SINGLE TEMPERATURE ELECTRIC STRAP ON THERMOSTAT, LOCATED ON HWR PIPE, SHALL CYCLE FAN ON WHENEVER HWR TEMPERATURE IS ABOVE 95°F. PROVIDE STEP DOWN CONTROL POWER TRANSFORMER WITHIN CABINET.

D M601 HOT WATER CABINET UNIT HEATER CONTROL

NO SCALE

DDC INPUT/OUTPUT SUMMARY TABLE

BUILDING: DANE COUNTY JOB CENTER	HARDWARE																										SOFTWARE											
	OUTPUT										INPUT											ALARM				APPLICATION PROGRAMS											
	DIGITAL				ANALOG						DIGITAL				ANALOG							DGTL	ANALOG														
SYSTEM: RTU'S (TYPICAL OF EACH)	START/STOP	ENABLE/DISABLE	OPEN/CLOSE	HAND/OFF/AUTO	STATUS LIGHT	CONTROL	SET PT. ADJUSTMENT	POSITION	SPEED	STATUS	STATUS LIGHT	POSITION	TEMPERATURE	PRESSURE	FLOW	DIFF. PRESSURE	CFM	MANUAL OVERDRIVE	EQUIPMENT ALARM	MAINTENANCE	HIGH LIMIT	LOW LIMIT	RUN TIME	SCHEDULED S/ST	OPTIMAL S/ST	DUTY CYCLING	DEMAND LIMITING	NIGHT SETBACK	ECONOMIZER	CFM CONTROL	COLD DECK RESET	HOT DECK RESET	HOT WATER RESET	COND. WATER RESET	CHILLER SEQUENCING	SMOKE CONTROL	
OCCUPIED TIME: PROGRAMMABLE																																				
POINT DESCRIPTION																																				
FILTER										X										X																
OUTSIDE AIR													X																							
SUPPLY AIR													X																							
RETURN AIR													X																							
MIXED AIR													X																							
MINIMUM OUTSIDE AIR DPR.									X																											
ECONOMIZER OUTSIDE AIR DPR.									X																											
RETURN AIR DAMPER									X																											
EXHAUST AIR DAMPER									X																											
LOW TEMP. LIMIT										X																										
RTU	X								X	X										X																
EXHAUST FAN	X									X										X																
HIGH S.A. STATIC PRESSURE										X																										
SUPPLY DUCT STATIC PRESSURE														X																						
MIN. OUTSIDE AIR CFM																	X																			
STAGE 1 HEAT	X																																			
STAGE 1 COOLING	X																																			
STAGE 2 COOLING	X																																			
FIRE ALARM										X																										

F M601 ROOF TOP UNIT CONTROL (TYPICAL ALL RTU'S)

NO SCALE

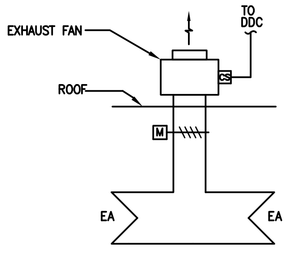

CONTROL SEQUENCE:

CONTROLS ARE ELECTRIC.

EXHAUST FANS SHALL BE INTERLOCKED WITH RTU'S TO OPERATE CONTINUOUSLY WHEN RTU IS OPERATING IN THE OCCUPIED MODE. WHEN THE THE ROOFTOP UNIT CONTROLLER INITIATES THE OCCUPIED MODE, A SIGNAL FROM A CONTACT IN THE ROOFTOP UNIT CONTROLLER SHALL BE TRANSMITTED, THROUGH A CONTROL RELAY, TO AN AUXILIARY CONTACT IN THE EXHAUST FAN STARTER TO OPEN THE CONTROL DAMPER AND START THE FAN. PROVIDE INTERLOCK WIRING BETWEEN CONTACT IN ROOFTOP UNIT CONTROLLER, CONTROL RELAY, AND EXHAUST FAN STARTER AUXILIARY CONTACT. FAN SHALL BE DEENERGIZED AND CONTROL DAMPER SHALL FULLY CLOSE THROUGH A SIGNAL FROM THE FIRE ALARM SYSTEM. PROVIDE CONTROL RELAY TO INTERFACE FIRE ALARM CONTROL SIGNAL WITH AUXILIARY CONTACTS AT FAN STARTER.

C M601 GENERAL EXHAUST FAN CONTROL

NO SCALE

VAV CONTROL SEQUENCE:

CONTROLS ARE DIRECT DIGITAL, WITH ELECTRIC ACTUATION. REFER TO TERMINAL UNIT SPECIFICATION FOR CONTROLS FURNISHED WITH UNIT. FOR EACH TERMINAL UNIT, PROVIDE DDC CONTROL TO MONITOR SPACE TEMPERATURE, MODULATE THE UNIT DAMPER AND MODULATE THE TWO-WAY, ELECTRIC, N.O. REHEAT COIL CONTROL VALVE AND WALL FIN CONTROL VALVE TO MAINTAIN SPACE TEMPERATURE. OCCUPIED MODE SPACE TEMPERATURE SETPOINTS SHALL BE BETWEEN 72 & 75 DEGREES F. (ADJ). OCCUPIED MODE, NIGHT CYCLE, AND MORNING WARMUP AND COOLDOWN MODES SHALL BE DEFINED BY OPERATION OF THE RESPECTIVE ROOFTOP UNIT. A NIGHT CYCLE SIGNAL SHALL BE FIELD WIRED FROM A CONTACT IN THE ROOFTOP UNIT CONTROLLER TO EACH VAV TERMINAL UNIT CONTROLLER.

DURING OCCUPIED MODE: WHEN THE ZONE TEMPERATURE IS GREATER THAN ITS OCCUPIED MODE COOLING SETPOINT, THE ZONE DAMPER SHALL MODULATE BETWEEN THE MINIMUM AIRFLOW (ADJ) AND THE MAXIMUM COOLING AIRFLOW (ADJ) UNTIL THE ZONE TEMPERATURE IS SATISFIED. WHEN THE ZONE TEMPERATURE IS BETWEEN THE OCCUPIED MODE COOLING AND HEATING SETPOINTS, THE ZONE DAMPER SHALL MAINTAIN THE MINIMUM OCCUPIED AIRFLOW SETTING (ADJ). WHEN THE OCCUPIED ZONE TEMPERATURE IS LESS THAN THE HEATING SETPOINT, THE ZONE DAMPER SHALL MAINTAIN THE MINIMUM AIRFLOW SETTING AND MODULATE IN PARALLEL THE REHEAT CONTROL VALVE AND WALL FIN CONTROL VALVE TO MAINTAIN THE HEATING SETPOINT. REFER TO THE VAV BOX SCHEDULE FOR MAXIMUM COOLING AND MINIMUM AIRFLOWS.

NIGHT CYCLE: THE ZONE DAMPER SHALL REMAIN FULLY OPEN. THE ROOFTOP UNIT SHALL CYCLE ON AND OFF TO MAINTAIN THE DEDICATED NIGHT CYCLE SPACE TEMPERATURE SENSOR SETPOINT. THE REHEAT COIL CONTROL VALVE SHALL REMAIN FULLY CLOSED.

MORNING WARMUP AND COOLDOWN CYCLES: THE ZONE DAMPER SHALL REMAIN FULLY OPEN. THE ROOFTOP UNIT SHALL CYCLE ON AND OFF TO MAINTAIN THE DEDICATED MORNING WARMUP AND COOLDOWN SPACE TEMPERATURE SENSOR SETPOINTS. THE REHEAT COIL CONTROL VALVE SHALL REMAIN FULLY CLOSED.

DURING NIGHT CYCLE AND MORNING WARMUP AND COOLDOWN MODES, THE WALL FIN CONTROL VALVE SHALL REMAIN FULLY CLOSED.

VAV CONTROL SEQUENCE:

CONTROLS ARE DIRECT DIGITAL, WITH ELECTRIC ACTUATION. REFER TO TERMINAL UNIT SPECIFICATION FOR CONTROLS FURNISHED WITH UNIT. FOR EACH TERMINAL UNIT, PROVIDE DDC CONTROL TO MONITOR SPACE TEMPERATURE, MODULATE THE UNIT DAMPER AND MODULATE THE TWO-WAY, ELECTRIC, N.O. REHEAT COIL CONTROL VALVE TO MAINTAIN SPACE TEMPERATURE. OCCUPIED MODE SPACE TEMPERATURE SETPOINTS SHALL BE BETWEEN 72 & 75 DEGREES F. (ADJ). OCCUPIED MODE, NIGHT CYCLE, AND MORNING WARMUP AND COOLDOWN MODES SHALL BE DEFINED BY OPERATION OF THE RESPECTIVE ROOFTOP UNIT. A NIGHT CYCLE SIGNAL SHALL BE FIELD WIRED FROM A CONTACT IN THE ROOFTOP UNIT CONTROLLER TO EACH VAV TERMINAL UNIT CONTROLLER.

DURING OCCUPIED MODE: WHEN THE ZONE TEMPERATURE IS GREATER THAN ITS OCCUPIED MODE COOLING SETPOINT, THE ZONE DAMPER SHALL MODULATE BETWEEN THE MINIMUM AIRFLOW (ADJ) AND THE MAXIMUM COOLING AIRFLOW (ADJ) UNTIL THE ZONE TEMPERATURE IS SATISFIED. WHEN THE ZONE TEMPERATURE IS BETWEEN THE OCCUPIED MODE COOLING AND HEATING SETPOINTS, THE ZONE DAMPER SHALL MAINTAIN THE MINIMUM OCCUPIED AIRFLOW SETTING (ADJ). WHEN THE OCCUPIED ZONE TEMPERATURE IS LESS THAN THE HEATING SETPOINT, THE ZONE DAMPER SHALL MAINTAIN THE MINIMUM AIRFLOW SETTING AND MODULATE THE REHEAT CONTROL VALVE TO MAINTAIN THE HEATING SETPOINT. REFER TO THE VAV BOX SCHEDULE FOR MAXIMUM COOLING AND MINIMUM AIRFLOWS.

NIGHT CYCLE: THE ZONE DAMPER SHALL REMAIN FULLY OPEN. THE ROOFTOP UNIT SHALL CYCLE ON AND OFF TO MAINTAIN THE DEDICATED NIGHT CYCLE SPACE TEMPERATURE SENSOR SETPOINT. THE REHEAT COIL CONTROL VALVE SHALL REMAIN FULLY CLOSED.

MORNING WARMUP AND COOLDOWN CYCLES: THE ZONE DAMPER SHALL REMAIN FULLY OPEN. THE ROOFTOP UNIT SHALL CYCLE ON AND OFF TO MAINTAIN THE DEDICATED MORNING WARMUP AND COOLDOWN SPACE TEMPERATURE SENSOR SETPOINTS. THE REHEAT COIL CONTROL VALVE SHALL REMAIN FULLY CLOSED.

ISSUED FOR:

CONSTRUCTION

INTERIOR REMODEL

01-29-09

DRAWING SET	CD
COPYRIGHT STRANG, INC.	2009
FILE NAME	M601
REVISIONS	
DRAWN	KSO
CHECKED	CCL
DATE	01-29-09
PROJECT NO.	2007070

PROJECT TITLE

DANE COUNTY
JOB CENTER
INTERIOR REMODEL
BID #109001

1819 ABERG AVENUE
MADISON, WISCONSIN

SHEET TITLE

HVAC
CONTROL
SEQUENCES

SHEET NO.

M601

STRANG

ARCHITECTURE
ENGINEERING
INTERIOR DESIGN

STRANG INC.
6411 MINERAL POINT ROAD
MADISON, WI 53705-4395

T/ 608 276 9200
F/ 608 276 9204

Henneman Engineering Inc.
Madison:
1232 Fourier Drive, Suite 101
Madison, Wisconsin 53717-1960
T 608.833.7000 F 608.833.6996
Email: info@henneman.com
Website: http://www.henneman.com
© 2009 Henneman Engineering Inc. / S. reg. #184-000206
(001-013373) (063-036372)
JOB NO. 07-5780

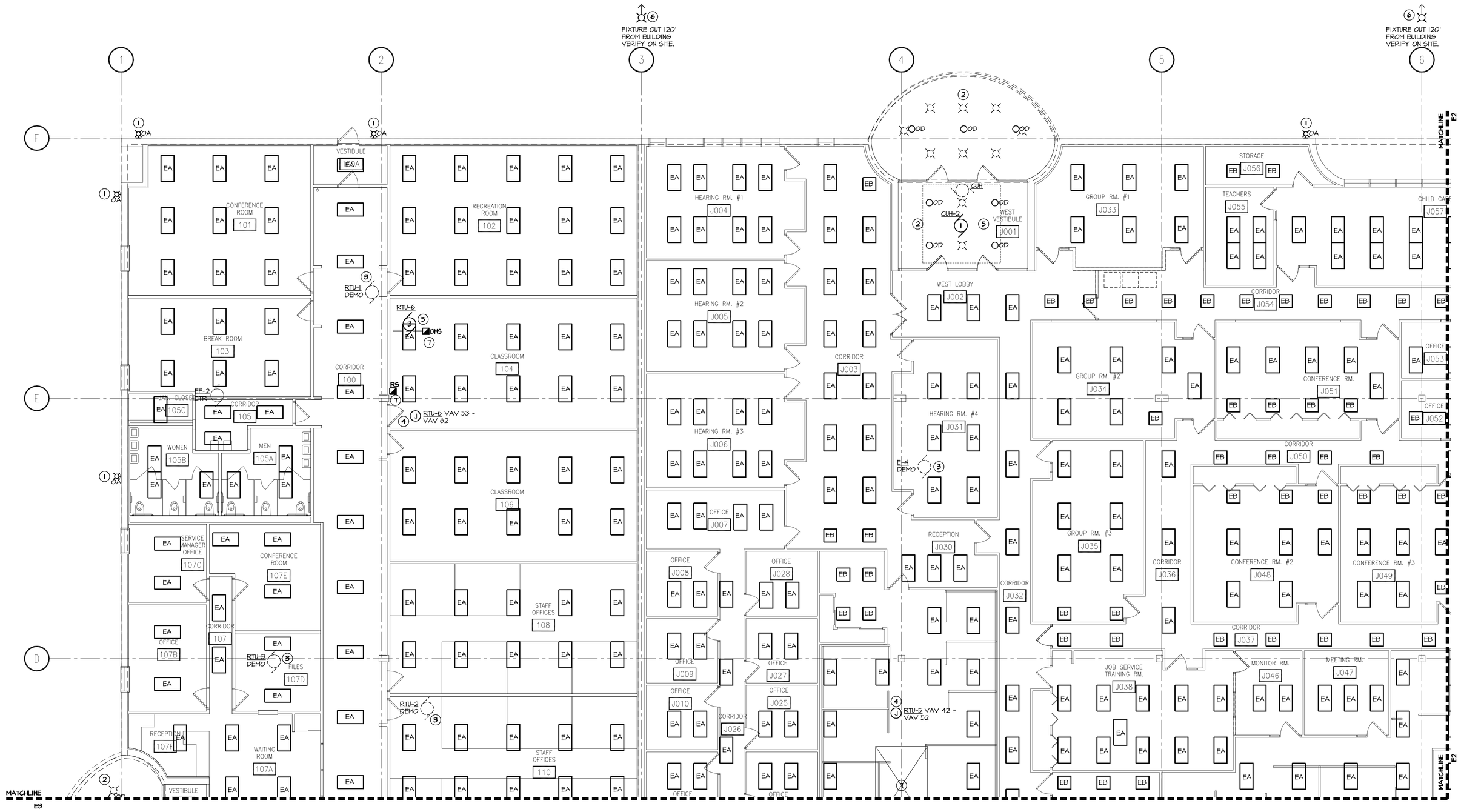

1 / E201A FLOOR PLAN AREA A - ELECTRICAL

SCALE: 1/8"=1'-0"

SHEET NOTES

1. NEW FIXTURE SHALL BE INSTALLED AT EXISTING FIXTURE LOCATION. REMOVE EXISTING FIXTURE AND DISPOSE LEGALLY. INSTALL NEW FIXTURE CONNECTED TO EXISTING CIRCUIT AND CONTROL. VERIFY EXISTING CONDITIONS ON SITE.
2. EXISTING RECESSED DOWNLIGHTS IN CANOPY SHALL BE REMOVED AND DISPOSED OF LEGALLY. PROVIDE NEW LIGHTING INCLUDING SUPPORTS, AND NECESSARY CUTTING. PATCHING TO BE DONE BY OTHERS. RECONNECT TO EXISTING CIRCUITS AND CONTROL.
3. EXISTING MECHANICAL EQUIPMENT BEING REMOVED. DISCONNECT AND REMOVE ALL ASSOCIATED ELECTRICAL EQUIPMENT NOT BEING REUSED. REMOVE ALL CONDUIT AN WIRE THAT CAN BE ACCESSED BACK TO POWER SOURCE. VERIFY EXISTING CONDITIONS ON SITE.
4. NEW JUNCTION BOX WITH 120 VOLT, 20 AMP DEDICATED CIRCUIT FROM RESPECTIVE EXISTING PANEL PRESENTLY SERVING AREA. WIRING TO INDIVIDUAL VAV UNITS SHALL BE BY OTHERS.
5. NEW MECHANICAL EQUIPMENT CONNECTION. PROVIDE POWER FROM EXISTING SOURCE AS INDICATED OR TO NEAREST EXISTING PANEL SERVING AREA.
6. REMOVE EXISTING POSTLIGHT & REPLACE WITH NEW WIDELITE #94(OPH-1000/FTTS-5, MOUNT ON 40', 5" SQUARE STEEL POLE SATIN ALUMINUM FINISH. INCLUDE REPLACEMENT OF EXISTING CONCRETE BASE WITH A NEW 30" DIA. X 60" DEEP CONCRETE BASE. REVISE & REUSE EXISTING CIRCUITS AND CONTROL. VERIFY ALL EXISTING CONDITIONS ON SITE.
7. PROVIDE NEW DUCT SMOKE DETECTOR & REMOTE STATUS INDICATOR.

GENERAL NOTES

1. ALL TYPES EA, EB, EC, ED, AND EE FIXTURES INDICATED ON THESE DRAWINGS ARE TO BE REMOVED AND CAREFULLY STORED SO THAT NEW MECHANICAL AND CEILING WORK CAN BE PERFORMED. FIXTURES SHALL BE STORED, IN A PROTECTED LOCATION DESIGNATED BY OWNER. FIXTURES SHALL BE CLEANED AND PROVIDED WITH NEW ELECTRONIC BALLASTS AND LAMPS AND SHALL BE REPAIRED AS NECESSARY BEFORE REINSTALLING AFTER NEW MECHANICAL AND CEILING WORK IS COMPLETED. FIXTURES SHALL BE RECONNECTED TO EXISTING CIRCUITS AND CONTROLS PREVIOUSLY USED. ALL EXISTING CONDITIONS SHALL BE VERIFIED ON SITE.
2. SOME EXISTING FIXTURE TYPES MAY HAVE ALREADY HAD BALLASTS AND LAMPS REPLACED AS PART OF THE OWNERS MAINTENANCE PROGRAM. A UNIT PRICE PER FIXTURE SHALL BE PROVIDED AS A CREDIT TO THE OWNER FOR NOT RELAMPING & REBALLASTING THESE FIXTURES. THESE FIXTURES SHALL BE MARKED WITH A PIECE OF BRIGHT RED TAPE SO THAT THEY CAN BE CLEARLY IDENTIFIED AND COUNTED SO THAT A CORRECT CREDIT AMOUNT CAN BE PROVIDED TO OWNER.
3. THE LOCATIONS OF ALL LIGHT FIXTURES MUST BE FIELD VERIFIED.
4. PROVIDE NEW SUPPORTS FROM STRUCTURE TO ANY EXISTING CONDUITS, CABLES OR OTHER ELECTRICAL EQUIPMENT THAT PRESENTLY IS SUPPORTED FROM EXISTING CEILING SYSTEM THAT IS BEING REMOVED & REINSTALLED.
5. NEW LIGHT FIXTURES THAT ARE BEING INSTALLED TO REPLACE EXISTING SHALL BE RECONNECTED TO EXISTING CIRCUITS & CONTROLS.

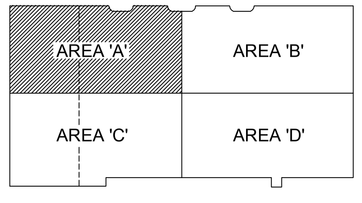

KEY PLAN

STRANG

ARCHITECTURE
ENGINEERING
INTERIOR DESIGN

STRANG INC.
6411 MINERAL POINT ROAD
MADISON, WI 53705-4395

T/ 608 276 9200
F/ 608 276 9204

ISSUED FOR:
CONSTRUCTION
INTERIOR REMODEL
01-29-09

CONSULTANT

ARNOLD & O'SHERIDAN, INC.
1111 DEMING WAY
MADISON, WI 53717

T/ 608 821 8500
F/ 608 821 8501

A&O PROJECT #080040

DRAWING SET	CD
COPYRIGHT STRANG, INC.	2009
FILE NAME	
REVISIONS	
DRAWN	LRH
CHECKED	AES
DATE	01-29-09
PROJECT NO.	2007070

PROJECT TITLE

DANE COUNTY JOB CENTER INTERIOR REMODEL BID #109001

1819 ABERG AVENUE
MADISON, WISCONSIN

SHEET TITLE

FLOOR PLAN AREA A - ELECTRICAL

SHEET NO.

E201A

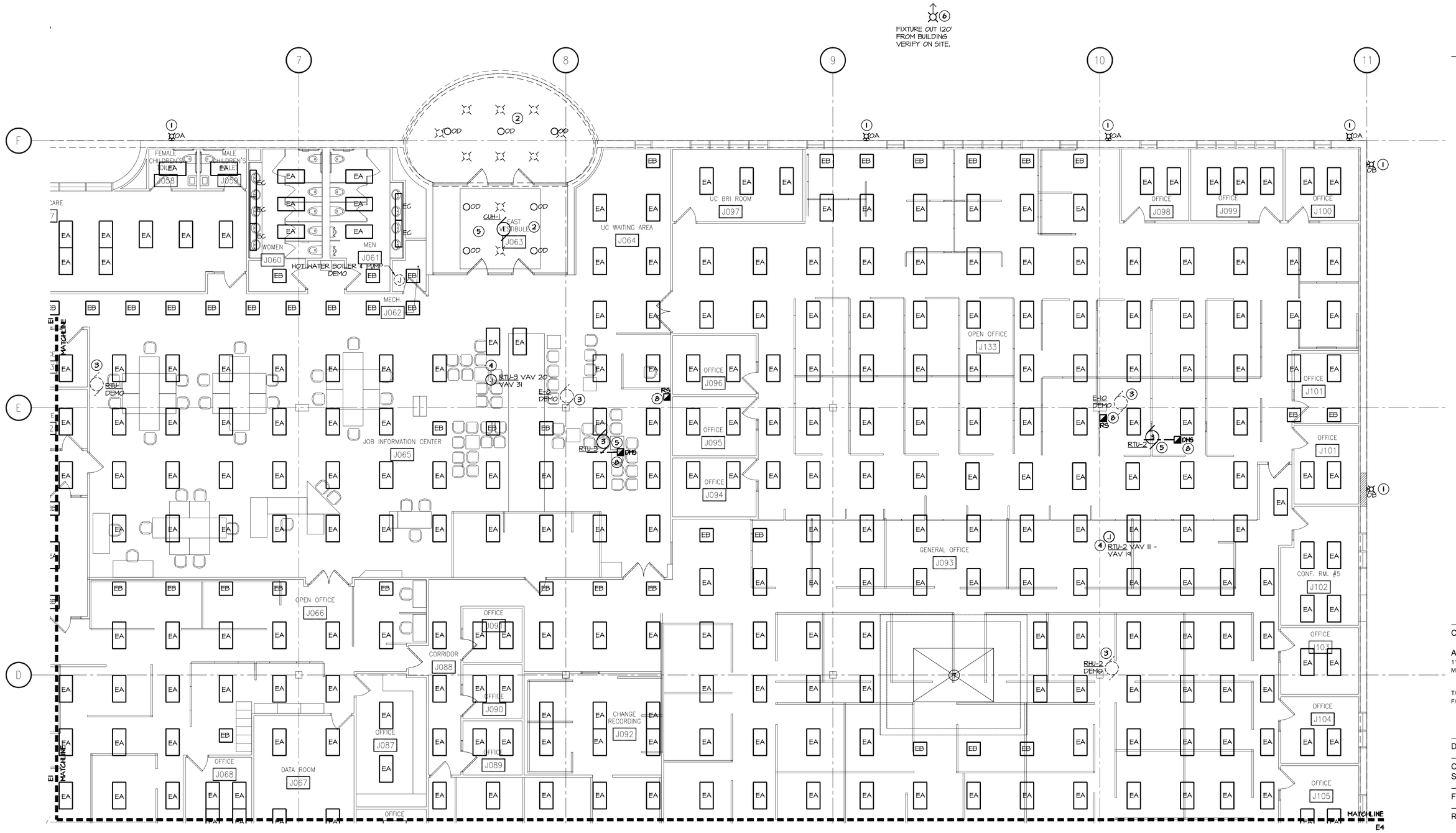

FLOOR PLAN AREA B - ELECTRICAL

1 / E201B

SCALE: 1/8"=1'-0"

SHEET NOTES

1. NEW FIXTURE SHALL BE INSTALLED AT EXISTING FIXTURE LOCATION. REMOVE EXISTING FIXTURE AND DISPOSE LEGALLY. INSTALL NEW FIXTURE CONNECTED TO EXISTING CIRCUIT AND CONTROL. VERIFY EXISTING CONDITIONS ON SITE.
2. EXISTING RECESSED DOWNLIGHTS IN CANOPY SHALL BE REMOVED AND DISPOSED OF LEGALLY. PROVIDE NEW LIGHTING INCLUDING SUPPORTS, AND NECESSARY CUTTING. PATCHING TO BE DONE BY OTHERS. RECONNECT TO EXISTING CIRCUITS AND CONTROL.
3. EXISTING MECHANICAL EQUIPMENT BEING REMOVED. DISCONNECT AND REMOVE ALL ASSOCIATED ELECTRICAL EQUIPMENT NOT BEING REUSED. REMOVE ALL CONDUIT AN WIRE THAT CAN BE ACCESSED BACK TO POWER SOURCE. VERIFY EXISTING CONDITIONS ON SITE.
4. NEW JUNCTION BOX WITH 120 VOLT, 20 AMP DEDICATED CIRCUIT FROM RESPECTIVE EXISTING PANEL PRESENTLY SERVING AREA. WIRING TO INDIVIDUAL VAV UNITS SHALL BE BY OTHERS.
5. NEW MECHANICAL EQUIPMENT CONNECTION. PROVIDE POWER FROM EXISTING SOURCE AS INDICATED.
6. REMOVE EXISTING POSTLIGHT & REPLACE WITH NEW WIDELITE RP44/OPM-1000/PTTS-5. MOUNT ON 40', 5" SQUARE STEEL POLE SATIN ALUMINUM FINISH. INCLUDE REPLACEMENT OF EXISTING CONCRETE BASE WITH A NEW 30" DIA. X 60" DEEP CONCRETE BASE. REVISE & REUSE EXISTING CIRCUITS AND CONTROL. VERIFY ALL EXISTING CONDITIONS ON SITE.
7. COVE LIGHTING IN THIS AREA TO REMAIN
8. PROVIDE NEW DUCT SMOKE DETECTOR & REMOTE STATUS INDICATOR.

GENERAL NOTES

1. ALL TYPES EA, EB, EC, ED, AND EE FIXTURES INDICATED ON THESE DRAWINGS ARE TO BE REMOVED AND CAREFULLY STORED SO THAT NEW MECHANICAL AND CEILING WORK CAN BE PERFORMED. FIXTURES SHALL BE STORED, IN A PROTECTED LOCATION DESIGNATED BY OWNER. FIXTURES SHALL BE CLEANED AND PROVIDED WITH NEW ELECTRONIC BALLASTS AND LAMPS AND SHALL BE REPAIRED AS NECESSARY BEFORE REINSTALLING AFTER NEW MECHANICAL AND CEILING WORK IS COMPLETED. FIXTURES SHALL BE RECONNECTED TO EXISTING CIRCUITS AND CONTROLS PREVIOUSLY USED. ALL EXISTING CONDITIONS SHALL BE VERIFIED ON SITE.
2. SOME EXISTING FIXTURE TYPES MAY HAVE ALREADY HAD BALLASTS AND LAMPS REPLACED AS PART OF THE OWNERS MAINTENANCE PROGRAM. A UNIT PRICE PER FIXTURE SHALL BE PROVIDED AS A CREDIT TO THE OWNER FOR NOT RELAMPING & REBALLASTING THESE FIXTURES. THESE FIXTURES SHALL BE MARKED WITH A PIECE OF BRIGHT RED TAPE SO THAT THEY CAN BE CLEARLY IDENTIFIED AND COUNTED SO THAT A CORRECT CREDIT AMOUNT CAN BE PROVIDED TO OWNER.
3. THE LOCATIONS OF ALL LIGHT FIXTURES MUST BE FIELD VERIFIED.
4. PROVIDE NEW SUPPORTS FROM STRUCTURE TO ANY EXISTING CONDUITS, CABLES OR OTHER ELECTRICAL EQUIPMENT THAT PRESENTLY IS SUPPORTED FROM EXISTING CEILING SYSTEM THAT IS BEING REMOVED & REINSTALLED.
5. NEW LIGHT FIXTURES THAT ARE BEING INSTALLED TO REPLACE EXISTING SHALL BE RECONNECTED TO EXISTING CIRCUITS & CONTROLS.

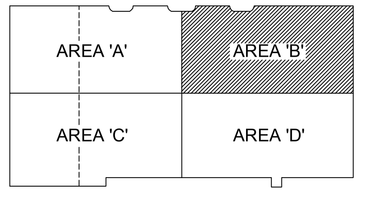

KEY PLAN

STRANG

ARCHITECTURE
ENGINEERING
INTERIOR DESIGN

STRANG INC.
6411 MINERAL POINT ROAD
MADISON, WI 53705-4395

T/ 608 276 9200
F/ 608 276 9204

ISSUED FOR:
CONSTRUCTION
INTERIOR REMODEL
01-29-09

CONSULTANT

ARNOLD & O'SHERIDAN, INC.
1111 DEMING WAY
MADISON, WI 53717

T/ 608 821 8500
F/ 608 821 8501

A&O PROJECT #080040

DRAWING SET	CD
COPYRIGHT STRANG, INC.	2009
FILE NAME	
REVISIONS	
DRAWN	LRH
CHECKED	AES
DATE	01-29-09
PROJECT NO.	2007070

PROJECT TITLE

DANE COUNTY
JOB CENTER
INTERIOR REMODEL
BID #109001

1819 ABERG AVENUE
MADISON, WISCONSIN

SHEET TITLE

FLOOR PLAN
AREA B -
ELECTRICAL

SHEET NO.

E201B

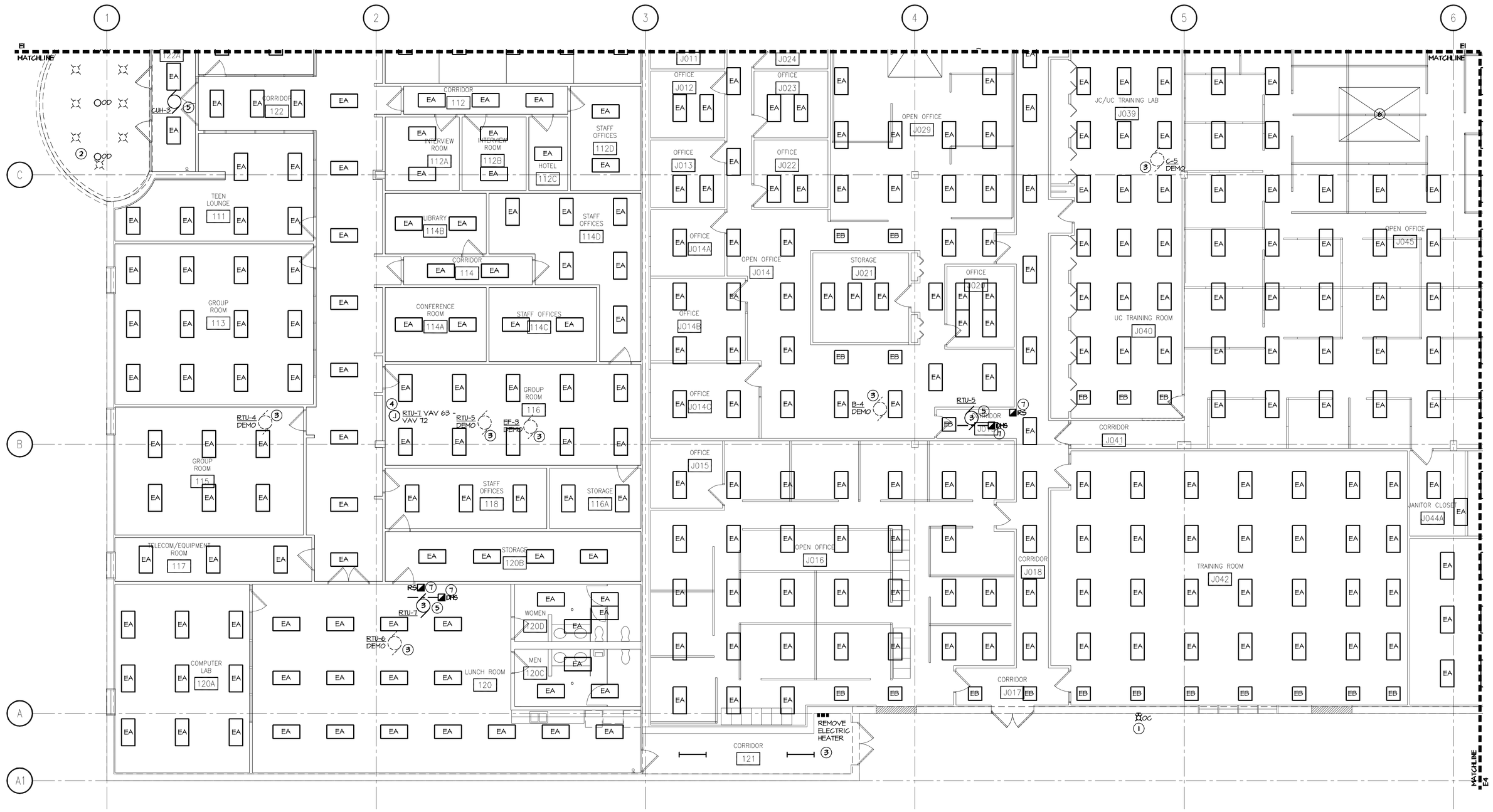

FLOOR PLAN AREA C - ELECTRICAL

1 / E201C

SCALE: 1/8"=1'-0"

SHEET NOTES

1. NEW FIXTURE SHALL BE INSTALLED AT EXISTING FIXTURE LOCATION. REMOVE EXISTING FIXTURE AND DISPOSE LEGALLY. INSTALL NEW FIXTURE CONNECTED TO EXISTING CIRCUIT AND CONTROL. VERIFY EXISTING CONDITIONS ON SITE.
2. EXISTING RECESSED DOWNLIGHTS IN CANOPY SHALL BE REMOVED AND DISPOSED OF LEGALLY. PROVIDE NEW LIGHTING INCLUDING SUPPORTS, AND NECESSARY CUTTING. PATCHING TO BE DONE BY OTHERS. RECONNECT TO EXISTING CIRCUITS AND CONTROL.
3. EXISTING MECHANICAL EQUIPMENT BEING REMOVED. DISCONNECT AND REMOVE ALL ASSOCIATED ELECTRICAL EQUIPMENT NOT BEING REUSED. REMOVE ALL CONDUIT AN WIRE THAT CAN BE ACCESSED BACK TO POWER SOURCE. VERIFY EXISTING CONDITIONS ON SITE.
4. NEW JUNCTION BOX WITH 120 VOLT, 20 AMP DEDICATED CIRCUIT FROM RESPECTIVE EXISTING PANEL PRESENTLY SERVING AREA. WIRING TO INDIVIDUAL VAV UNITS SHALL BE BY OTHERS.
5. NEW MECHANICAL EQUIPMENT CONNECTION. PROVIDE POWER FROM EXISTING SOURCE AS INDICATED.
6. COVE LIGHTING IN THIS AREA TO REMAIN
7. PROVIDE NEW DUCT SMOKE DETECTOR & REMOTE STATUS INDICATOR.

GENERAL NOTES

1. ALL TYPES EA, EB, EC, ED, AND EE FIXTURES INDICATED ON THESE DRAWINGS ARE TO BE REMOVED AND CAREFULLY STORED SO THAT NEW MECHANICAL AND CEILING WORK CAN BE PERFORMED. FIXTURES SHALL BE STORED, IN A PROTECTED LOCATION DESIGNATED BY OWNER. FIXTURES SHALL BE CLEANED AND PROVIDED WITH NEW ELECTRONIC BALLASTS AND LAMPS AND SHALL BE REPAIRED AS NECESSARY BEFORE REINSTALLING AFTER NEW MECHANICAL AND CEILING WORK IS COMPLETED. FIXTURES SHALL BE RECONNECTED TO EXISTING CIRCUITS AND CONTROLS PREVIOUSLY USED. ALL EXISTING CONDITIONS SHALL BE VERIFIED ON SITE.
2. SOME EXISTING FIXTURE TYPES MAY HAVE ALREADY HAD BALLASTS AND LAMPS REPLACED AS PART OF THE OWNERS MAINTENANCE PROGRAM. A UNIT PRICE PER FIXTURE SHALL BE PROVIDED AS A CREDIT TO THE OWNER FOR NOT RELAMPING & REBALLASTING THESE FIXTURES. THESE FIXTURES SHALL BE MARKED WITH A PIECE OF BRIGHT RED TAPE SO THAT THEY CAN BE CLEARLY IDENTIFIED AND COUNTED SO THAT A CORRECT CREDIT AMOUNT CAN BE PROVIDED TO OWNER.
3. THE LOCATIONS OF ALL LIGHT FIXTURES MUST BE FIELD VERIFIED.
4. PROVIDE NEW SUPPORTS FROM STRUCTURE TO ANY EXISTING CONDUITS, CABLES OR OTHER ELECTRICAL EQUIPMENT THAT PRESENTLY IS SUPPORTED FROM EXISTING CEILING SYSTEM THAT IS BEING REMOVED & REINSTALLED.
5. NEW LIGHT FIXTURES THAT ARE BEING INSTALLED TO REPLACE EXISTING SHALL BE RECONNECTED TO EXISTING CIRCUITS & CONTROLS.

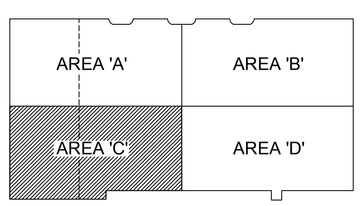

KEY PLAN

STRANG

ARCHITECTURE
ENGINEERING
INTERIOR DESIGN

STRANG INC.
6411 MINERAL POINT ROAD
MADISON, WI 53705-4395

T/ 608 276 9200
F/ 608 276 9204

ISSUED FOR:
CONSTRUCTION
INTERIOR REMODEL
01-29-09

CONSULTANT

ARNOLD & O'SHERIDAN, INC.
1111 DEMING WAY
MADISON, WI 53717

T/ 608 821 8500
F/ 608 821 8501

A&O PROJECT #080040

DRAWING SET	CD
COPYRIGHT STRANG, INC.	2009
FILE NAME	
REVISIONS	
DRAWN	LRH
CHECKED	AES
DATE	01-29-09
PROJECT NO.	2007070

PROJECT TITLE

DANE COUNTY
JOB CENTER
INTERIOR REMODEL
BID #109001

1819 ABERG AVENUE
MADISON, WISCONSIN

SHEET TITLE

FLOOR PLAN
AREA C -
ELECTRICAL

SHEET NO.

E201C

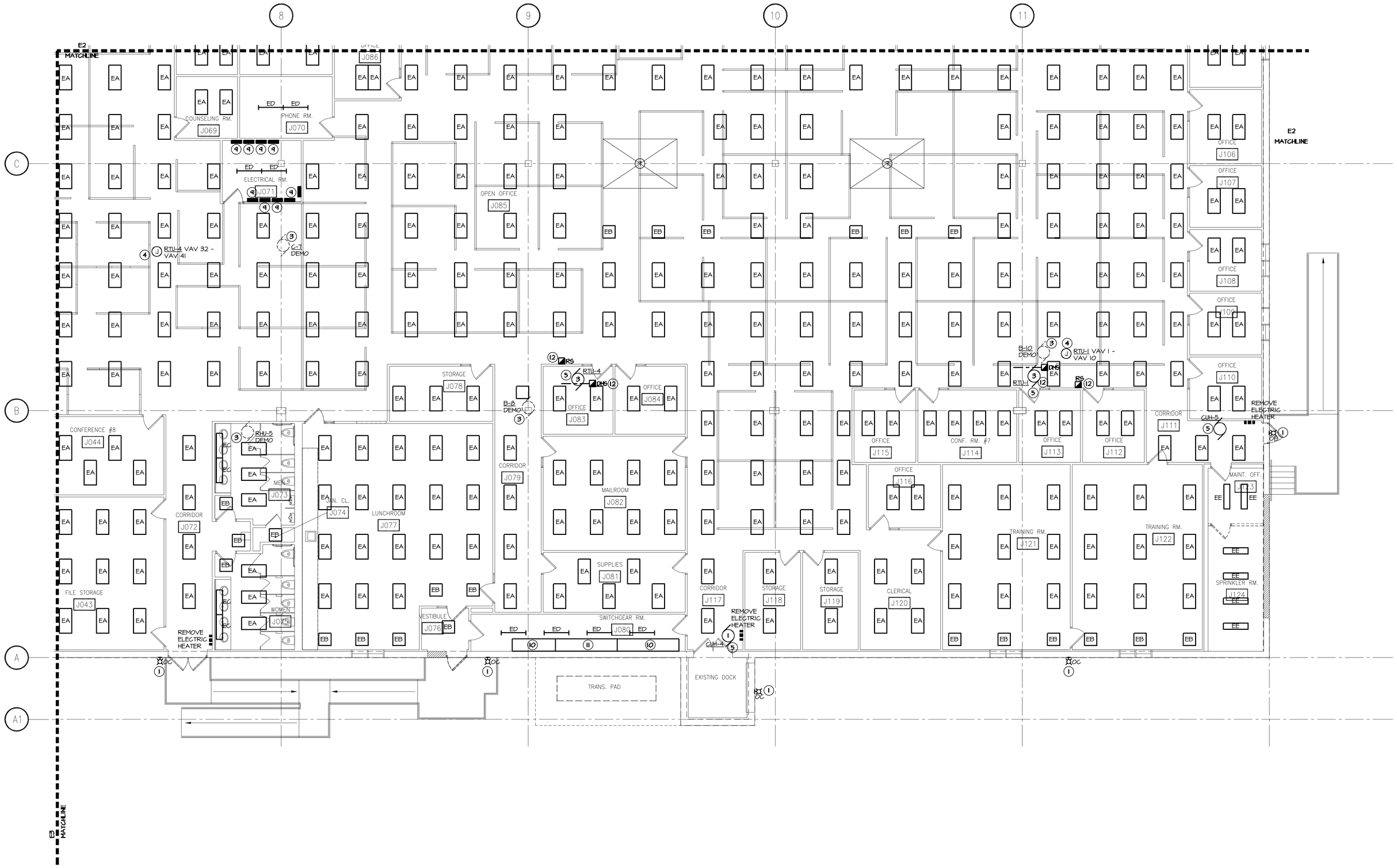

1 E201D FLOOR PLAN AREA D - ELECTRICAL

SCALE: 1/8"=1'-0"

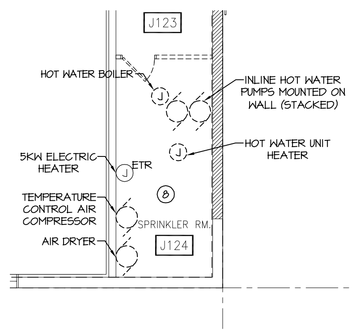

3 E201D SPRINKLER RM - DEMOLITION

SCALE: 1/8"=1'-0"

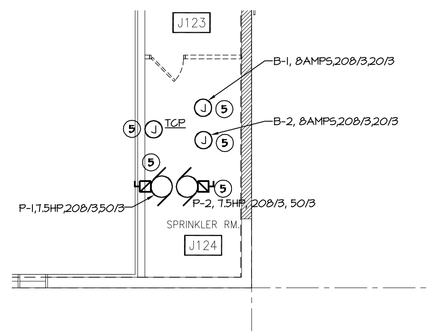

2 E201D SPRINKLER RM - NEW WORK

SCALE: 1/8"=1'-0"

SHEET NOTES

1. NEW FIXTURE SHALL BE INSTALLED AT EXISTING FIXTURE LOCATION. REMOVE EXISTING FIXTURE AND DISPOSE LEGALLY. INSTALL NEW FIXTURE CONNECTED TO EXISTING CIRCUIT AND CONTROL. VERIFY EXISTING CONDITIONS ON SITE.
2. EXISTING RECESSED DOWNLIGHTS IN CANOPY SHALL BE REMOVED AND DISPOSED OF LEGALLY. PROVIDE NEW LIGHTING INCLUDING SUPPORTS, AND NECESSARY CUTTING, PATCHING TO BE DONE BY OTHERS. RECONNECT TO EXISTING CIRCUITS AND CONTROL.
3. EXISTING MECHANICAL EQUIPMENT BEING REMOVED. DISCONNECT AND REMOVE ALL ASSOCIATED ELECTRICAL EQUIPMENT NOT BEING REISED. REMOVE ALL CONDUIT AN WIRE THAT CAN BE ACCESSED BACK TO POWER SOURCE. VERIFY EXISTING CONDITIONS ON SITE.
4. NEW JUNCTION BOX WITH 120 VOLT, 20 AMP DEDICATED CIRCUIT FROM RESPECTIVE EXISTING PANEL PRESENTLY SERVING AREA. WIRING TO INDIVIDUAL VAV UNITS SHALL BE BY OTHERS.
5. NEW MECHANICAL EQUIPMENT CONNECTION. PROVIDE POWER FROM EXISTING PANEL PRESENTLY SERVING AREA. PROVIDE NEW BREAKERS AS REQUIRED TO ACCOMODATE NEW EQUIPMENT.
6. SEE SHEET E5
7. GOVE LIGHTING IN THIS AREA TO REMAIN
8. DISCONNECT ALL EQUIPMENT BEING REMOVED
9. EXISTING LIGHTING AND POWER PANELS TO BE REISED. REVISE AND PROVIDE NEW BREAKERS TO ACCOMODATE REMODELING AND NEW EQUIPMENT BEING ADDED. VERIFY EXISTING CONDITIONS ON SITE.
10. EXISTING SWITCHBOARD SECTIONS TO REMAIN. REVISE AS REQUIRED.
11. NEW SWITCHBOARD
12. PROVIDE NEW DUCT SMOKE DETECTOR & REMOTE STATUS INDICATOR.

GENERAL NOTES

1. ALL TYPES EA, EB, EC, ED, AND EE FIXTURES INDICATED ON THESE DRAWINGS ARE TO BE REMOVED AND CAREFULLY STORED SO THAT NEW MECHANICAL AND CEILING WORK CAN BE PERFORMED. FIXTURES SHALL BE STORED, IN A PROTECTED LOCATION DESIGNATED BY OWNER. FIXTURES SHALL BE CLEANED AND PROVIDED WITH NEW ELECTRONIC BALLASTS AND LAMPS AND SHALL BE REPAIRED AS NECESSARY BEFORE REINSTALLING AFTER NEW MECHANICAL AND CEILING WORK IS COMPLETED. FIXTURES SHALL BE RECONNECTED TO EXISTING CIRCUITS AND CONTROLS PREVIOUSLY USED. ALL EXISTING CONDITIONS SHALL BE VERIFIED ON SITE.
2. SOME EXISTING FIXTURE TYPES MAY HAVE ALREADY HAD BALLASTS AND LAMPS REPLACED AS PART OF THE OWNERS MAINTENANCE PROGRAM. A UNIT PRICE PER FIXTURE SHALL BE PROVIDED AS A CREDIT TO THE OWNER FOR NOT RELAMPING & REBALLASTING THESE FIXTURES. THESE FIXTURES SHALL BE MARKED WITH A PIECE OF BRIGHT RED TAPE SO THAT THEY CAN BE CLEARLY IDENTIFIED AND COUNTED SO THAT A CORRECT CREDIT AMOUNT CAN BE PROVIDED TO OWNER.
3. THE LOCATIONS OF ALL LIGHT FIXTURES MUST BE FIELD VERIFIED.
4. PROVIDE NEW SUPPORTS FROM STRUCTURE TO ANY EXISTING CONDUITS, CABLES OR OTHER ELECTRICAL EQUIPMENT THAT PRESENTLY IS SUPPORTED FROM EXISTING CEILING SYSTEM THAT IS BEING REMOVED & REINSTALLED.
5. NEW LIGHT FIXTURES THAT ARE BEING INSTALLED TO REPLACE EXISTING SHALL BE RECONNECTED TO EXISTING CIRCUITS & CONTROLS.

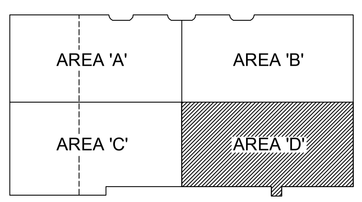

N

KEY PLAN

STRANG

ARCHITECTURE
ENGINEERING
INTERIOR DESIGN

STRANG INC.
6411 MINERAL POINT ROAD
MADISON, WI 53705-4395

T/ 608 276 9200
F/ 608 276 9204

ISSUED FOR:

CONSTRUCTION

INTERIOR REMODEL

01-29-09

CONSULTANT

ARNOLD & O'SHERIDAN, INC.
1111 DEMING WAY
MADISON, WI 53717

T/ 608 821 8500
F/ 608 821 8501

A&O PROJECT #080040

DRAWING SET	CD
COPYRIGHT STRANG, INC.	2009
FILE NAME	
REVISIONS	
DRAWN	LRH
CHECKED	AES
DATE	01-29-09
PROJECT NO.	2007070

PROJECT TITLE

DANE COUNTY
JOB CENTER
INTERIOR REMODEL
BID #109001

1819 ABERG AVENUE
MADISON, WISCONSIN

SHEET TITLE

FLOOR PLAN
AREA D -
ELECTRICAL

SHEET NO.

E201D

SYMBOLS LIST:

MOUNTING HEIGHTS FOR DEVICES AND EQUIPMENT TO BE MEASURED FROM FINISHED FLOOR TO CENTERLINE OF DEVICE.

LIGHTING:

A — CEILING MOUNTED FLUORESCENT FIXTURE

FIXTURE DESIGNATION (SEE SCHEDULE)

NOTE: CIRCLE INSIDE OF FIXTURE SYMBOL DENOTES THAT THE FIXTURE IS PENDANT OR SURFACE MOUNT. REFER TO LIGHT FIXTURE SCHEDULE FOR EXACT MOUNTING REQUIREMENTS.

LIGHTING FIXTURE - WALL SURFACE

LIGHTING FIXTURE - POLE MOUNTED

LIGHTING FIXTURE - CEILING RECESS

SYSTEMS:

DMS — DUCT MOUNTED SMOKE DETECTOR

RS — DUCT DETECTOR REMOTE STATUS INDICATOR. VERIFY LOCATION ON SITE.

POWER:

HARDWIRED CONNECTION

AHU-1 MDP/PA — 3 — MOTOR CONNECTION

MOTOR DESIGNATION AND PANEL FEEDING MOTOR. REFER TO ONE- LINE POWER DIAGRAM FOR FEEDER AND STARTER INFORMATION.

(1) SINGLE PHASE MOTOR 120V., 1Φ / 20A, IP / 3 #12'S-3/4"C. UNLESS NOTED OTHERWISE

(3) THREE-PHASE MOTOR

NON FUSED DISCONNECT SWITCH - MOUNT AT 60" AFF UNLESS NOTED OTHERWISE

FUSED DISCONNECT SWITCH - MOUNT AT 60" AFF UNLESS NOTED OTHERWISE

M — MOTOR STARTER - MANUAL TYPE - MOUNT AT 60" AFF UNLESS NOTED OTHERWISE

MOTOR STARTER - MAGNETIC TYPE - MOUNT AT 60" AFF UNLESS NOTED OTHERWISE

MOTOR STARTER - COMBINATION TYPE - MOUNT AT 60" AFF UNLESS NOTED OTHERWISE

VFD — VARIABLE FREQUENCY DRIVE
SINGLE PHASE MOTOR 120V., 1Φ / 20A, IP / 3 #12'S-3/4"C. UNLESS NOTED OTHERWISE
THREE-PHASE MOTOR

ELECTRICAL SHEET INDEX

E1 FLOOR PLAN AREA A - ELECTRICAL NEW
E2 FLOOR PLAN AREA B - ELECTRICAL NEW
E3 FLOOR PLAN AREA C - ELECTRICAL NEW
E4 FLOOR PLAN AREA D - ELECTRICAL NEW
E5 SYMBOLS, DIAGRAMS, AND ABBREVIATIONS

ABBREVIATIONS:

ABV	ABOVE
AFF	ABOVE FINISHED FLOOR
AFG	ABOVE FINISHED GRADE
AIC	AVAILABLE INTERRUPTING CURRENT
AIE	ARCHITECT/ENGINEER
ALT	ALTERNATE
ALT SW	ALTERNATOR SWITCH
ARCH	ARCHITECT
ATS	AUTOMATIC TRANSFER SWITCH
BFG	BELOW FINAL GRADE
BLDG	BUILDING
BPC	BOLTED PRESSURE CONTACT SWITCH
BKR	BREAKER
BOL	BUILT IN OVERLOAD
C	CONDUIT
CATV	CABLE TELEVISION
CCTV	CLOSED CIRCUIT TELEVISION
CB	CIRCUIT BREAKER
CD	CLOTHES DRYER
CKT	CIRCUIT
CLG	CEILING
CM	COFFEE MAKER
CO	COPY MACHINE
CP	CONTROL PANEL
CS	COMBINATION STARTER
CT	CURRENT TRANSFORMER
CW	CLOTHES WASHER
DE	DUAL ELEMENT FUSES
DIR	DIRECT
DISC	DISCONNECT
DN	DOWN
DW	DISHWASHER
EC	ELECTRICAL CONTRACTOR
ELEV	ELEVATION
EM	EMERGENCY
ENT	ELECTRICAL NON-METALLIC TUBING
EMT	ELECTRIC METALLIC TUBING
EOL	END OF LINE RESISTOR
EP	EXPLOSION PROOF
ER	EXISTING TO BE REMOVED
ERL	EXISTING TO BE RELOCATED
ERLD	EXISTING RELOCATED
ETR	EXISTING TO REMAIN
EXIST	EXISTING
EWC	ELECTRIC WATER COOLER
F	FLUSH
FAAP	FIRE ALARM ANNUNCIATOR PANEL
FACP	FIRE ALARM CONTROL PANEL
FBO	FURNISHED BY OTHERS
FDR	FEEDER
FIXT	FIXTURE
FLR	FLOOR
FLA	FULL LOAD AMPS
FLUOR	FLUORESCENT
FS	FLOW SWITCH
FVNR	FULL VOLTAGE NON-REVERSING
FZR	FREEZER
GC	GENERAL CONTRACTOR
GD	GARBAGE DISPOSAL
GFI	GROUND FAULT INTERRUPTER
GRC	GALVANIZED RIGID CONDUIT
GRD	GROUND
GYP	GYPSUM BOARD
HID	HIGH INTENSITY DISCHARGE
HOA	HAND-OFF-AUTO SWITCH
HP	HORSEPOWER
HPS	HIGH PRESSURE SODIUM
HV	HIGH VOLTAGE
HVAC	HEATING & VENTILATING - AIR CONDITIONING
HVC	HEATING VENTILATING CONTRACTOR
HW	HEAVYWALL
ID	INDIRECT
IL	INTERLOCK
IMC	INTERMEDIATE METAL CONDUIT
INC	INCANDESCENT
IU	IN UNIT
J-BOX	JUNCTION BOX
LG	LAY-IN GRID
LTG	LIGHTING
LV	LOW VOLTAGE
LVT	LINE VOLTAGE THERMOSTAT
M	MICROWAVE
MAG	MAGNETIC STARTER
MAN	MANUAL STARTER
MCC	MOTOR CONTROL CENTER
MDP	MAIN DISTRIBUTION PANEL
MLO	MAIN LUGS ONLY
MSB	MAIN SWITCHBOARD
MTD	MOUNTED
NIC	NOT IN CONTRACT
NL	NIGHT LIGHT (UNSWITCHED FIXTURE)
NU	NEAR UNIT
OU	ON UNIT
P	POLE
PB	PUSHBUTTON
PEND	PENDANT
PC	PHOTO CONTROL
PE SW	PNEUMATIC SWITCH
PLBG	PLUMBING CONTRACTOR
PNL	PANEL
PP	PAY PHONE
PR	PRINTER
R	RELAY
RAI	REMAIN AS IS
REC	RECESS
RECEPT	RECEPTACLE
RG	RANGE
RM	ROOM
RR	REFRIGERATOR
RVS	REDUCED VOLTAGE STARTING
RWK	REWORK
S	SPLINE
SEL. SW	SELECTOR SWITCH
SP SW	SPEED SWITCH
SURF	SURFACE
SW	SWITCH
TC	TIME CLOCK
TCP	TEMPERATURE CONTROL PANEL
TCC	TEMPERATURE CONTROL CONTRACTOR
TS	TAMPER SWITCH
TYP	TYPICAL
UCR	UNDER COUNTER REFRIGERATOR
UG	UNDERGROUND
UNIV	UNIVERSAL
USS	UNIT SUBSTATION
VM	VENDING MACHINE
WP	WEATHERPROOF
XFMR	TRANSFORMER

LIGHTING FIXTURE SCHEDULE

DES.	LAMP DATA NO.	LAMP DATA TYPE	DESCRIPTION	LIGHTING FIXTURE MANUFACTURER	LIGHTING FIXTURE CATALOG SERIES	VOLT	BALLAST TYPE	MOUNT
OA	1	100W MH	12" WALL MOUNT	GARDCO	800-D-W-12-L-100MH-120-BLP	120	E	W
OB	1	100W MH	12" WALL MOUNT	RUDD	6WCO-12-100M-D	120	E	W
OC	1	250W MH	16" WALL MOUNT	RUDD	6WCO-16-250M-I	120	E	W
OD	1	70W MH	8" DOWNLIGHT	KRAMER	KL8-10MH-LH-CL-HSPY-WFF-120	120	E	S
OF	1	1000W MH	40' POSTLIGHT	WIDELITE	SEE DRAWINGS	-	-	-

NOTE: TYPE OF FIXTURE SHALL BE INCLUDED AS AN ALTERNATE BID.

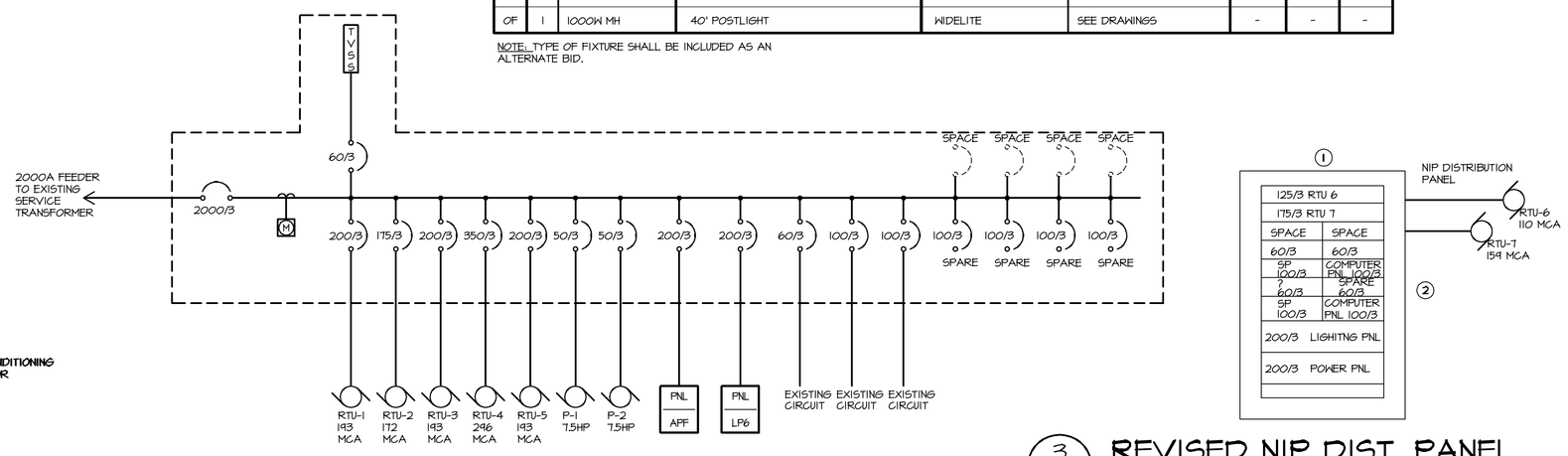

2 E301 NEW SWITCHBOARD MD

SCALE: NO SCALE

NOTE: NEW SWITCHBOARD SHALL BE FURNISHED BY OWNER. OWNER TO PURCHASE AND HAVE SWITCHBOARD DELIVERED TO THE SITE WHERE EC SHALL PLACE IN POSITION AND RECONNECT ALL NEW AND EXISTING CIRCUITS INCLUDING RECONNECT TO UTILITY SERVICE TRANSFORMERS. ALL CONDUIT, CABLES AND OTHER MISCELLANEOUS WORK AND MATERIAL SHALL BE INCLUDED FOR A COMPLETE INSTALLATION. BUILDING MUST BE KEPT IN OPERATION UNDER NORMAL BUSINESS HOURS. ANY DISRUPTIONS TO SERVICE CAN ONLY BE TOLERATED AFTER NORMAL HOURS OR ON WEEKENDS. ALL DISRUPTIONS SHALL BE COORDINATED AND APPROVED BY OWNER.

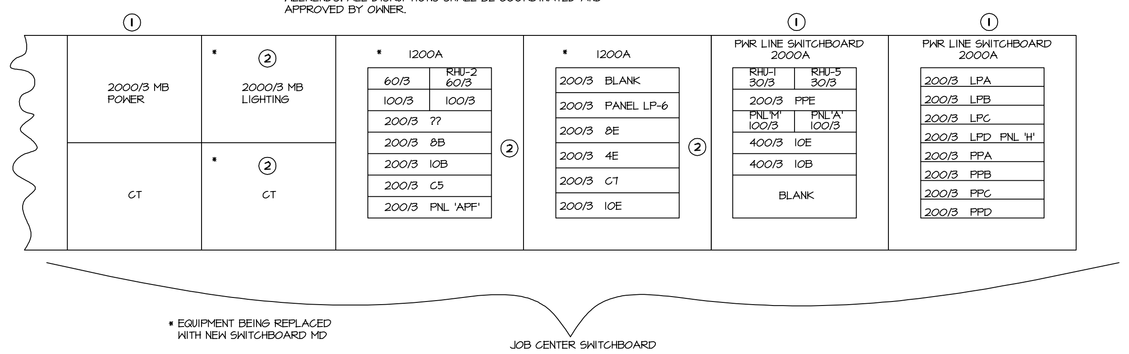

1 E301 EXISTING SWITCHBOARDS AND DISTRIBUTION PANELS

SCALE: NO SCALE

SHEET NOTES:

(1) EXISTING SWITCHBOARD & PANEL SECTIONS THAT REMAIN, REVISE AS REQUIRED TO ACCOMMODATE NEW LOADS.

(2) ALL EXISTING FEEDER CIRCUITS TO EXISTING EQUIPMENT BEING REMOVED SHALL BE COMPLETELY REMOVED INCLUDING CONDUIT, WIRE, JUNCTION BOXES, DISCONNECTS ETC.

3 E301 REVISED NIP DIST. PANEL

SCALE: NO SCALE

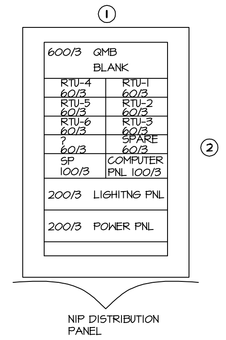

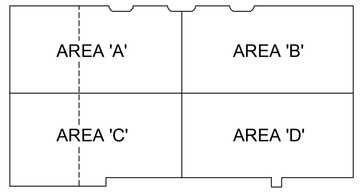

KEY PLAN

N

STRANG

ARCHITECTURE
ENGINEERING
INTERIOR DESIGN

STRANG INC.
6411 MINERAL POINT ROAD
MADISON, WI 53705-4395

T/ 608 276 9200
F/ 608 276 9204

ISSUED FOR:

CONSTRUCTION

INTERIOR REMODEL

01-29-09

CONSULTANT

ARNOLD & O'SHERIDAN, INC.
1111 DEMING WAY
MADISON, WI 53717

T/ 608 821 8500
F/ 608 821 8501

A&O PROJECT #080040

DRAWING SET	CD
COPYRIGHT STRANG, INC.	2009
FILE NAME	
REVISIONS	
DRAWN	LRH
CHECKED	AES
DATE	01-29-09
PROJECT NO.	2007070

PROJECT TITLE

DANE COUNTY
JOB CENTER
INTERIOR REMODEL
BID #109001

1819 ABERG AVENUE
MADISON, WISCONSIN

SHEET TITLE

SYMBOLS, DIAGRAMS, AND ABBREVIATIONS

SHEET NO.

E301